FUEL FILTER

EG1A8-02

ON–VEHICLE INSPECTION

INSPECT FUEL PRESSURE

(See step 2 on page EG–235)

EG1A9-02

COMPONENTS FOR REMOVAL AND INSTALLATION

EG

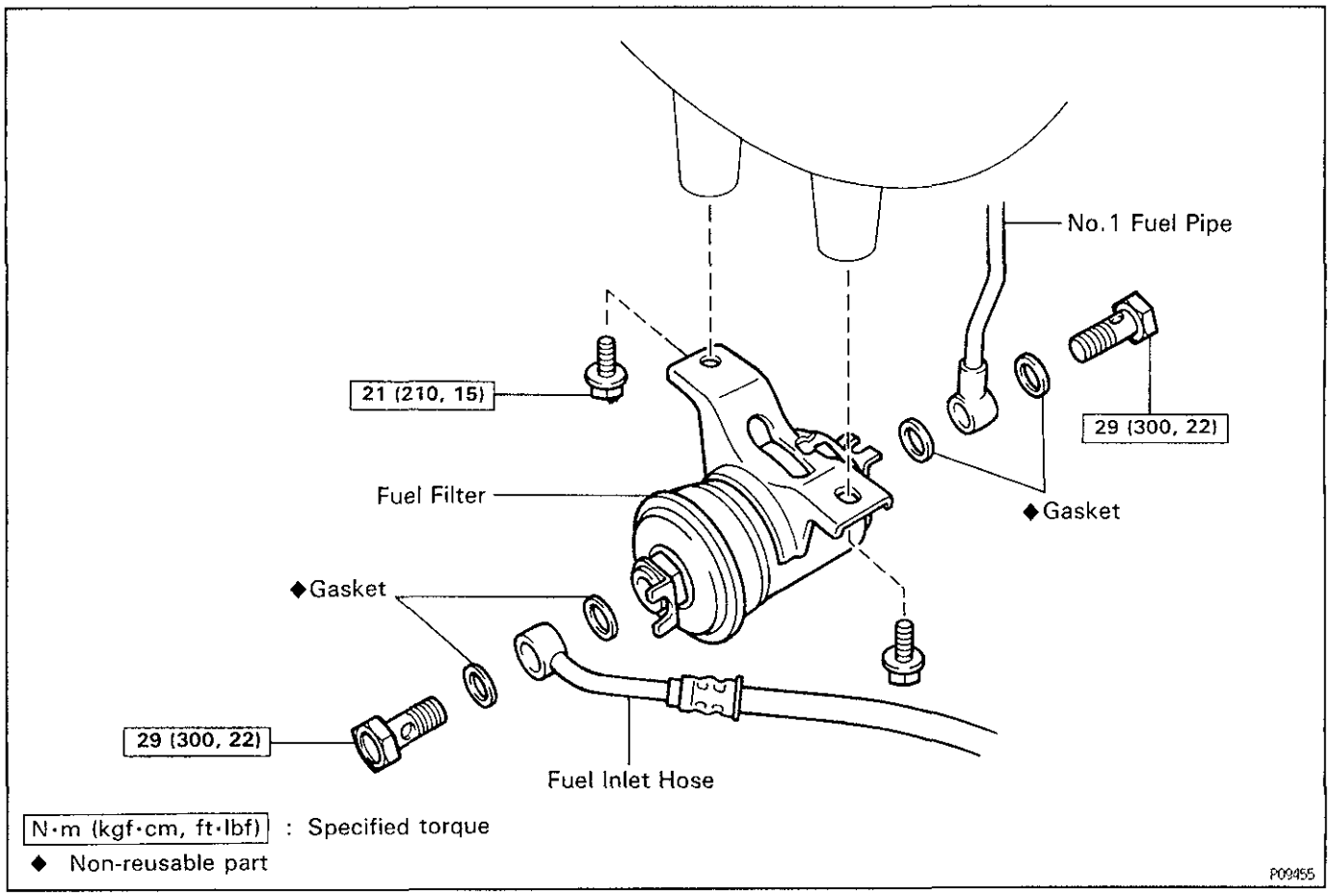

N·m (kgf·cm, ft·lbf) : Specified torque

◆ Non-reusable part

P09455