FUEL PRESSURE REGULATOR

EG1T5–01

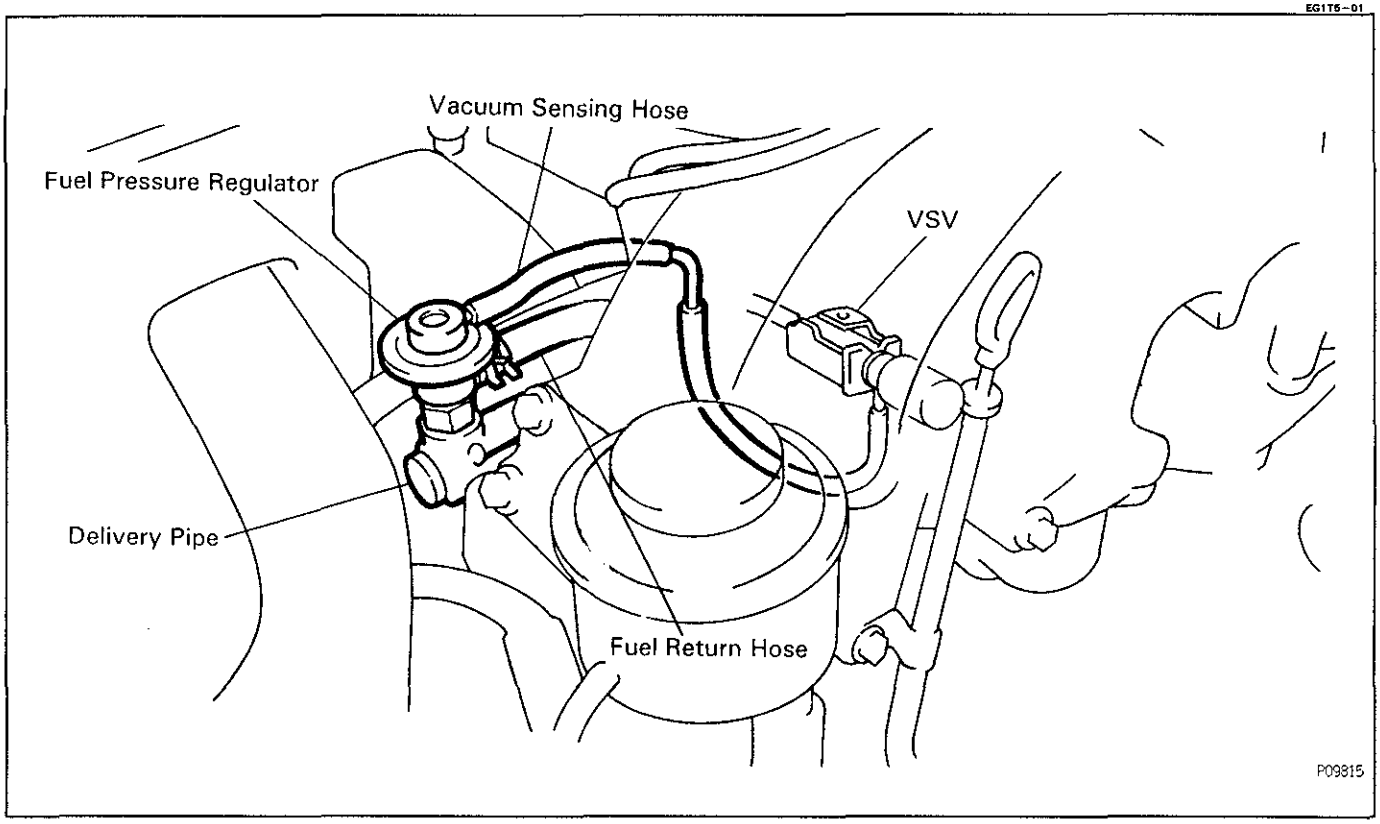

EG

EG0D5–04

ON–VEHICLE INSPECTION

INSPECT FUEL PRESSURE
(See step 2 on page EG–236)

EG1AC–02

COMPONENTS FOR REMOVAL AND INSTALLATION

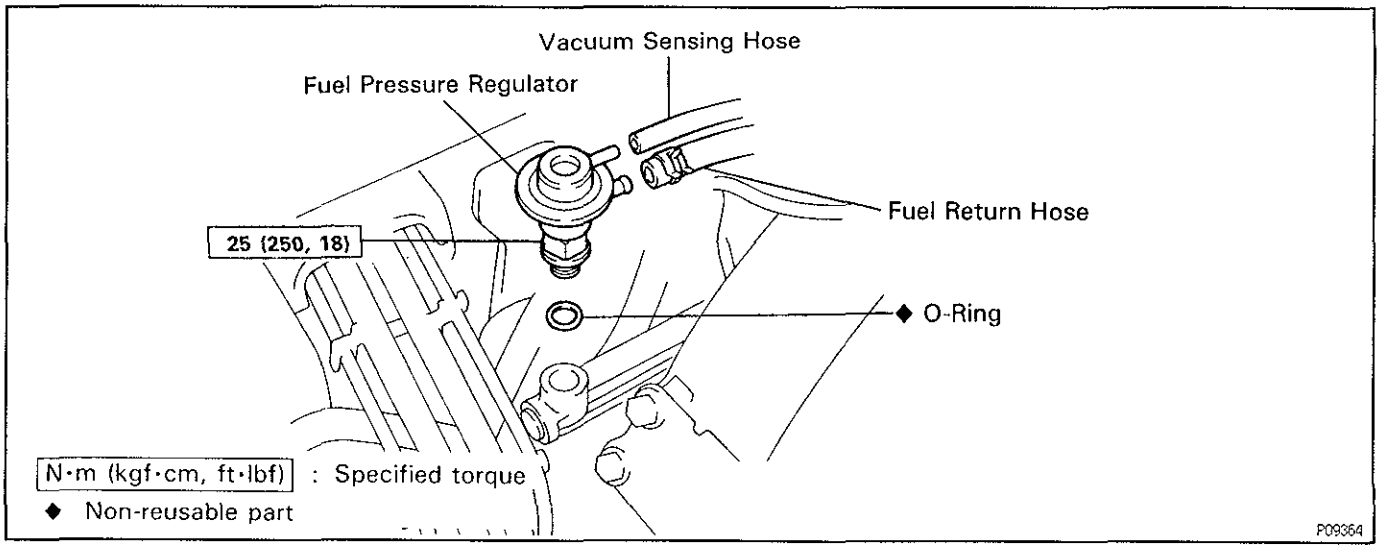

EG

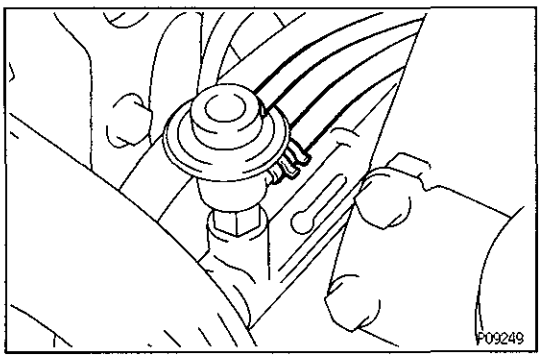

FUEL PRESSURE REGULATOR REMOVAL

EG1AD–03

1. **DISCONNECT VACUUM SENSING HOSE FROM FUEL PRESSURE REGULATOR**
2. **DISCONNECT FUEL RETURN HOSE FROM FUEL PRESSURE REGULATOR**
   HINT: Put a suitable container or shop towel under the pressure regulator.

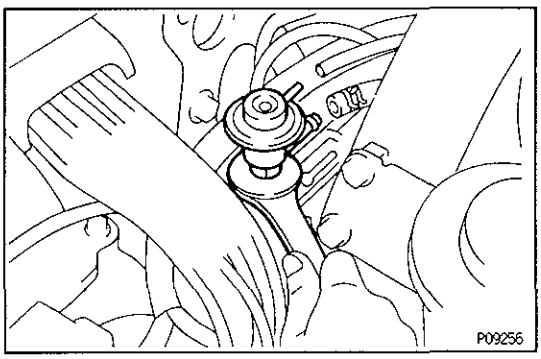

3. **REMOVE FUEL PRESSURE REGULATOR**
   Loosen the lock nut, and remove the fuel pressure regulator.

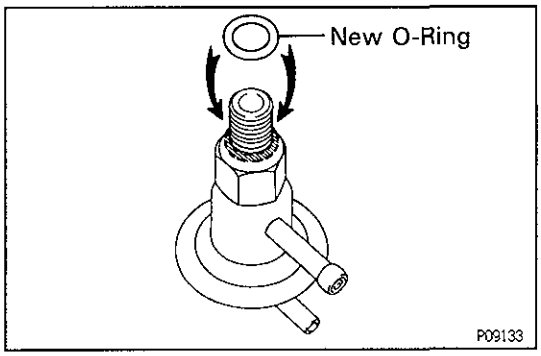

FUEL PRESSURE REGULATOR INSTALLATION

EG1AE–03

1. **INSTALL FUEL PRESSURE REGULATOR**

(a) Fully loosen the lock nut of the fuel pressure regulator.

(b) Apply a light coat of gasoline to a new O–ring and install it to the fuel pressure regulator.

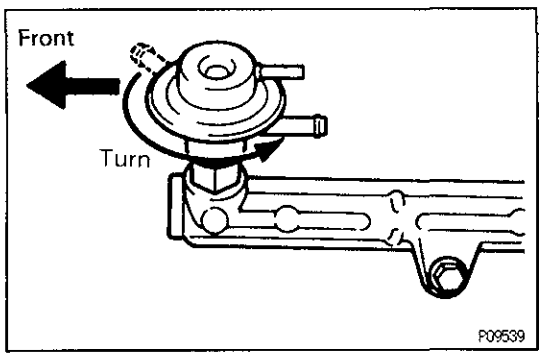

(c) Thrust the fuel pressure regulator completely into the delivery pipe by hand.

(d) Turn the fuel pressure regulator counterclockwise until the outlet faces in the direction indicated in the illustration.

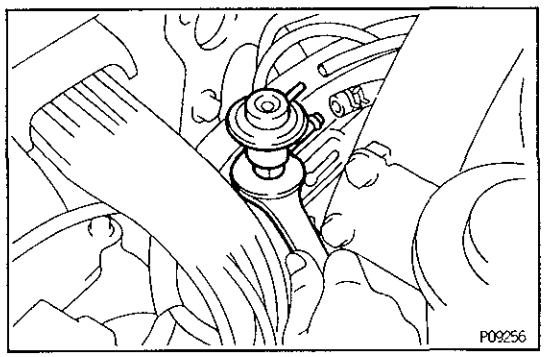

(e) Torque the lock nut.
Torque: 25 N·m (250 kgf·cm, 18 ft·lbf)

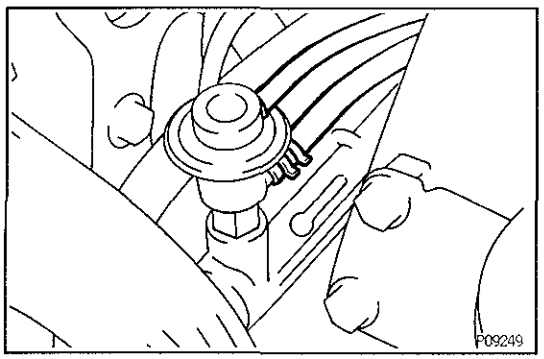

2. CONNECT FUEL RETURN HOSE TO FUEL PRESSURE REGULATOR
3. CONNECT VACUUM SENSING HOSE TO FUEL PRESSURE REGULATOR

4. START ENGINE AND CHECK FOR FUEL LEAKAGE