AIR FLOW METER

EG0YG-03

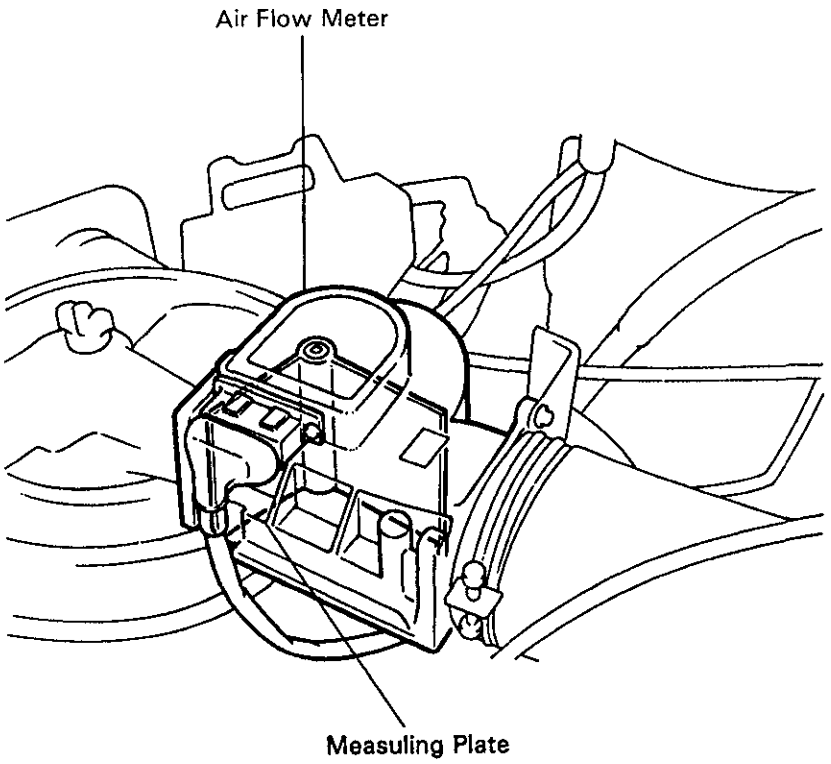

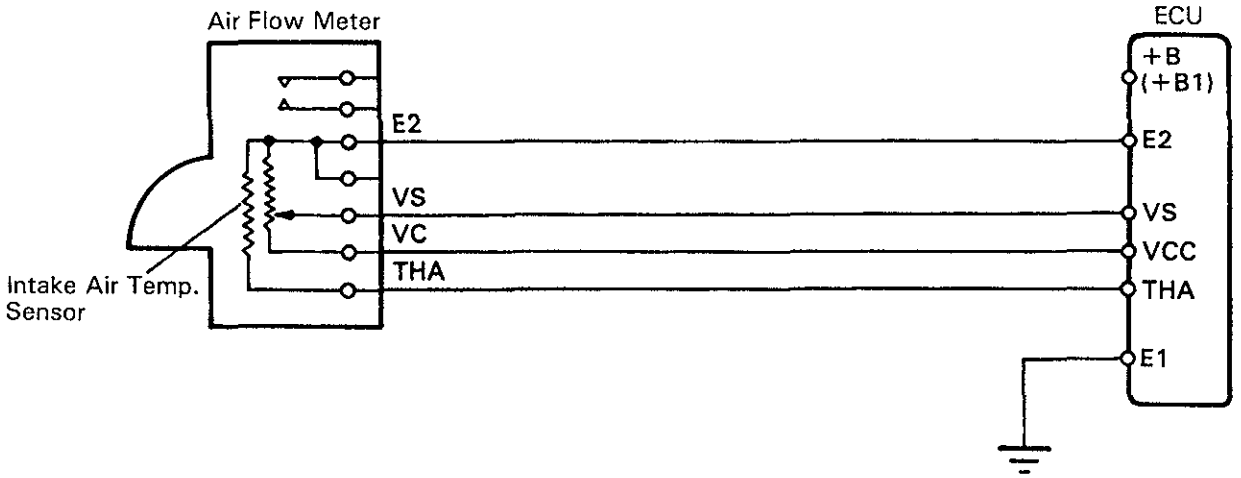

P09622
P05967

Z06695

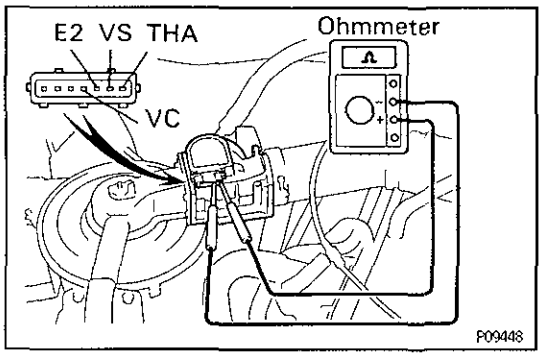

EG

ON–VEHICLE INSPECTION

EG0YH–03

INSPECT RESISTANCE OF AIR FLOW METER

(a) Disconnect the air flow meter connector.

(b) Using an ohmmeter, measure the resistance between each terminal.

Between terminals	Resistance	Temperature
VS – E2	200 – 600Ω	–
VC – E2	200 – 400Ω	–
THA – E2	10 – 20 kΩ	–20°C (–4°F)
THA – E2	4 – 7 kΩ	0°C (32°F)
THA – E2	2 – 3 kΩ	20°C (68°F)
THA – E2	0.9 – 1.3 kΩ	40°C (104°F)
THA – E2	0.4 – 0.7 kΩ	60°C (140°F)

If the resistance is not as specified, replace the air flow meter.

(c) Reconnect the air flow meter connector.

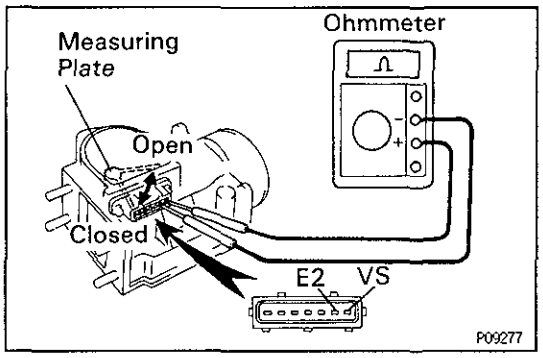

AIR FLOW METER INSPECTION

EG0H2–03

INSPECT AIR FLOW METER

Using an ohmmeter, measure the resistance between terminals VS and E2 by moving the measuring plate.

Resistance:

200 – 600 Ω at fully closed

20 – 1,200Ω at fully open

HINT: Resistance will change in a wave pattern as the measuring plate slowly opens.

If the resistance is not as specified, replace the air flow meter.