WATER TEMPERATURE SENSOR

EG0DW-06

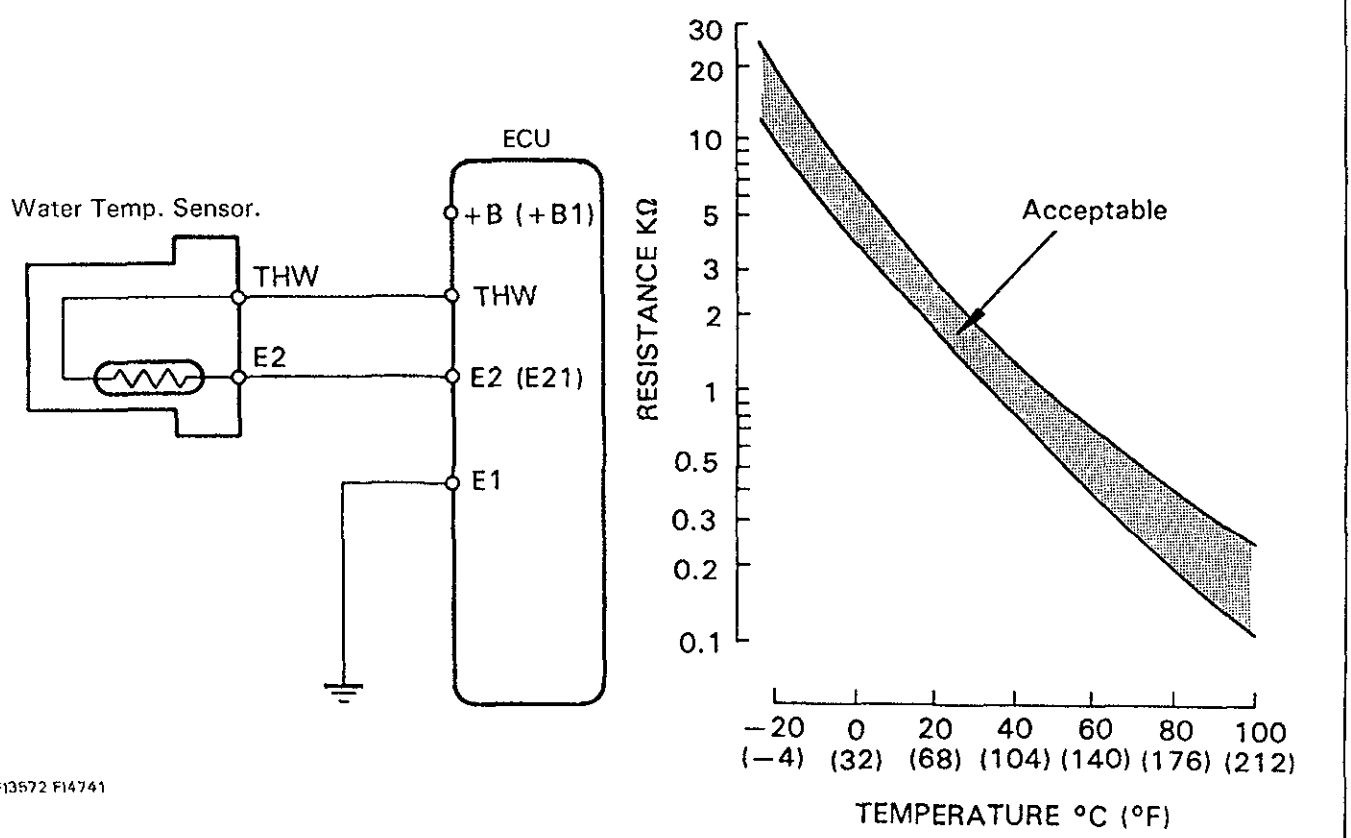

EG1SP-02

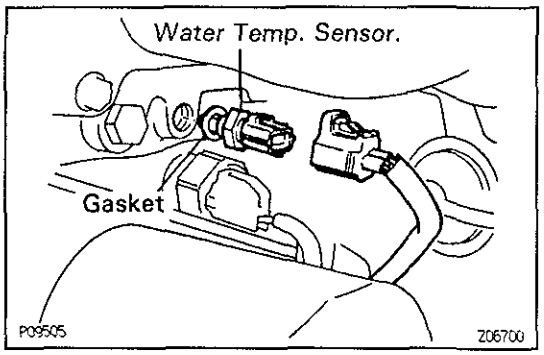

ENGINE COOLANT TEMPERATURE SENSOR INSPECTION

1. **DRAIN ENGINE COOLANT**
2. **REMOVE WATER TEMPERATURE SENSOR**

(a) Disconnect the water temp. sensor connector.

(b) Using a 19 mm deep socket wrench, remove the water temp. sensor and gasket.

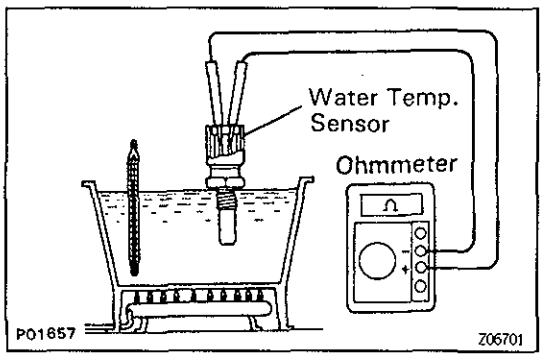

3. **INSPECT WATER TEMPERATURE SENSOR**

Using an ohmmeter, measure the resistance between the terminals.

Resistance:

Refer to the chart graph above

If the resistance is not as specified, replace the water temp. sensor.

4. REINSTALL WATER TEMPERATURE SENSOR

(a) Using a 19 mm deep socket wrench, install the water temp. sensor and gasket.
Torque: 20 N·m (200 kgf·cm, 14 ft·lbf)

(b) Connect the water temp. sensor connector.

5. REFILL ENGINE COOLANT

FUEL PUMP RELAY AND RESISTOR

EG0E0-09

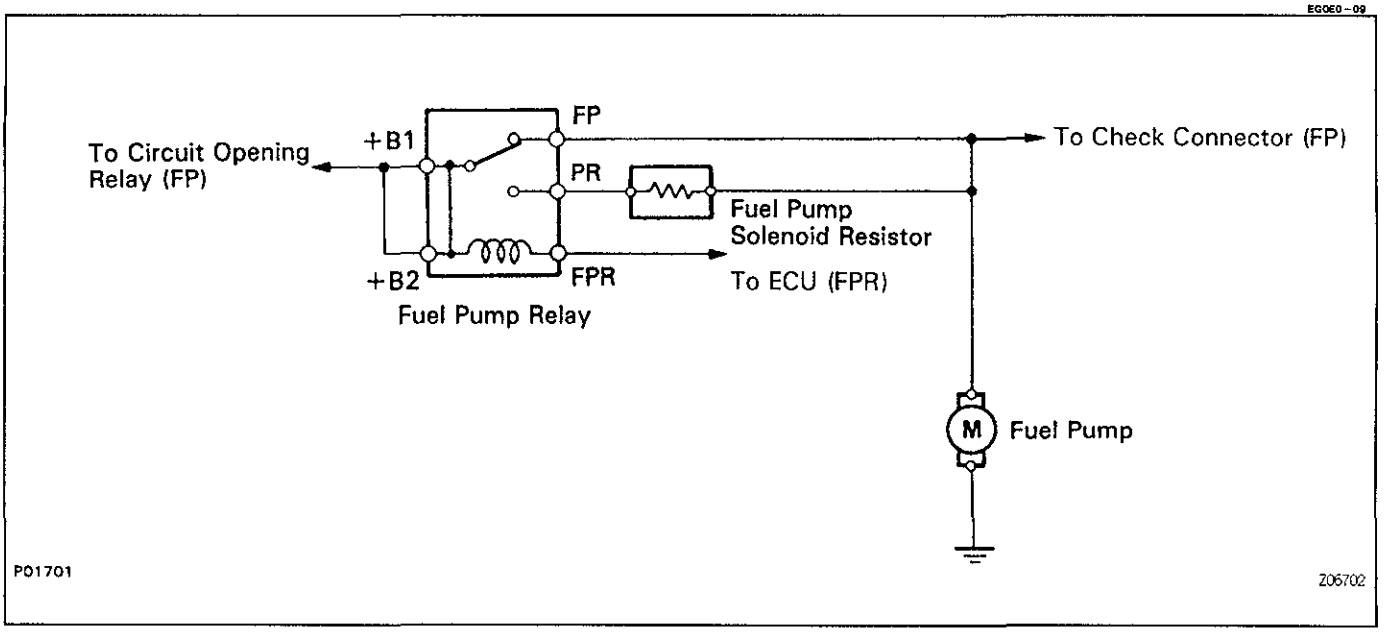

EG

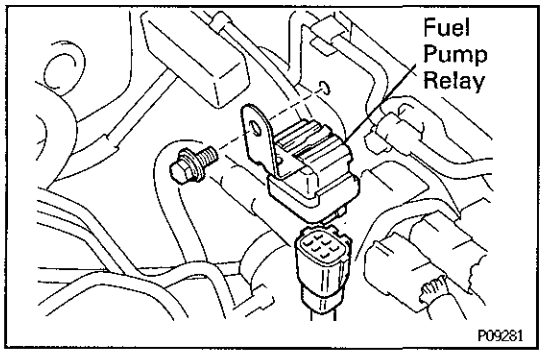

EG0E1-04

FUEL PUMP RELAY INSPECTION

1. REMOVE FUEL PUMP RELAY

(a) Disconnect the fuel pump relay connector.

(b) Remove the bolt and fuel pump relay.

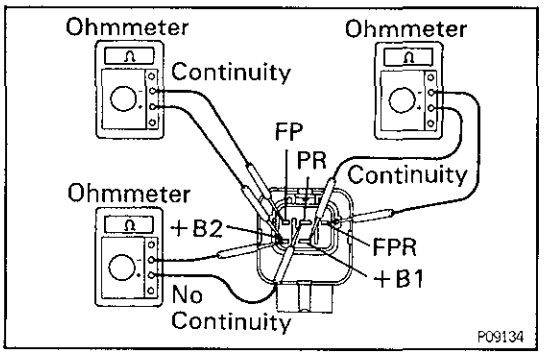

2. INSPECT FUEL PUMP RELAY

A. Inspect relay continuity

(a) Using an ohmmeter, check that there is continuity between terminals +B1 and FPR.

(b) Check that there is continuity between terminals +B2 and FP.

(c) Check that there is no continuity between terminals +B2 and PR.

If continuity is not as specified, replace the relay.

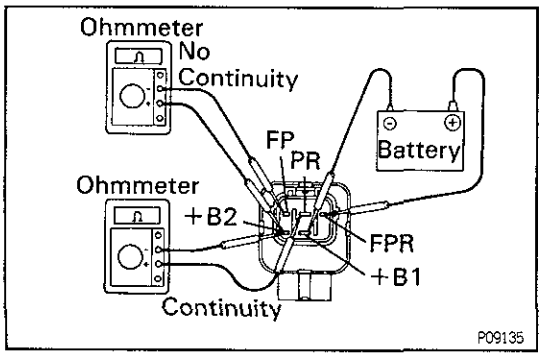

B. Inspect relay operation

(a) Apply battery voltage across terminals +B1 and FPR.

(b) Using an ohmmeter, check that there is no continuity between the +B2 and FP.

(c) Check that there is continuity between terminals +B2 and PR.

If operation is not as specified, replace the relay.

3. REINSTALL FUEL PUMP RELAY