KNOCK SENSOR

EG0TU–03

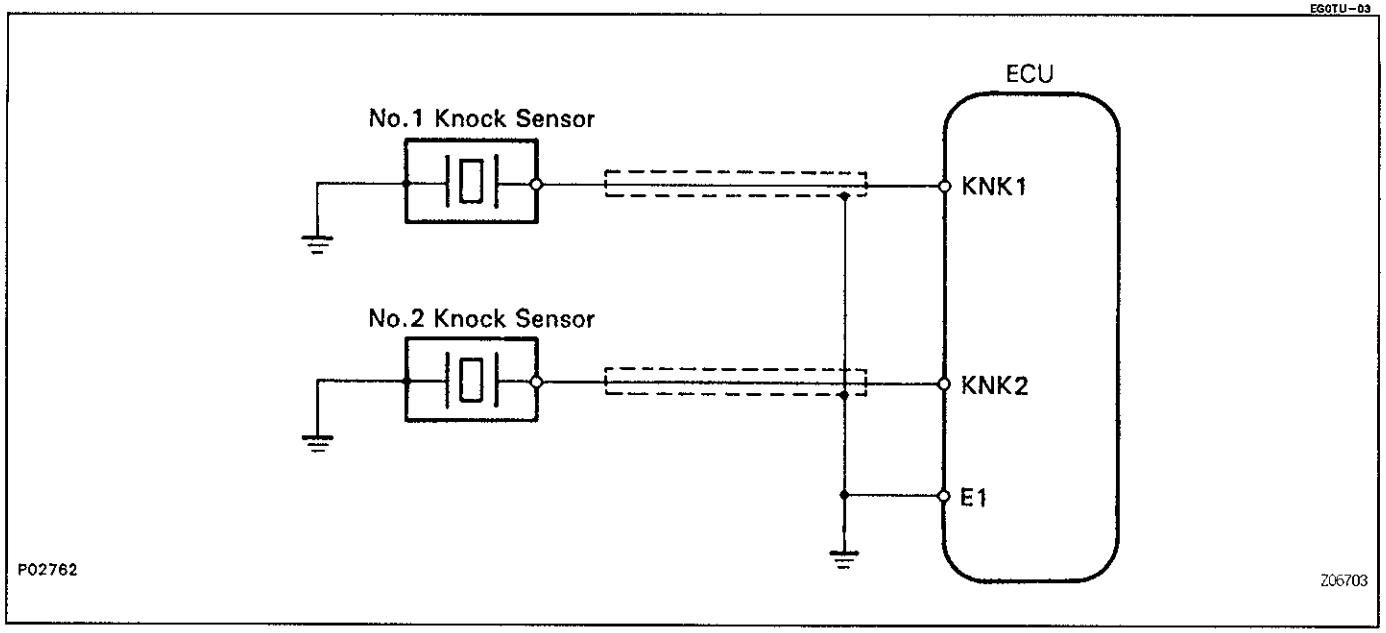

EG

EG0TV–02

KNOCK SENSORS INSPECTION

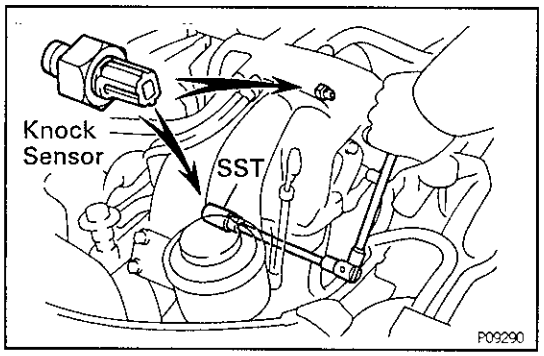

1. REMOVE KNOCK SENSOR

(a) Disconnect the knock sensor connector.

(b) Using SST, remove the knock sensor.
SST 09816–30010

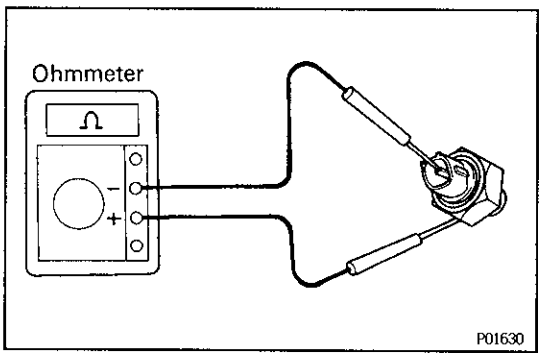

2. INSPECT KNOCK SENSOR

Using an ohmmeter, check that there is no continuity between the terminal and body.
If there is continuity, replace the sensor.

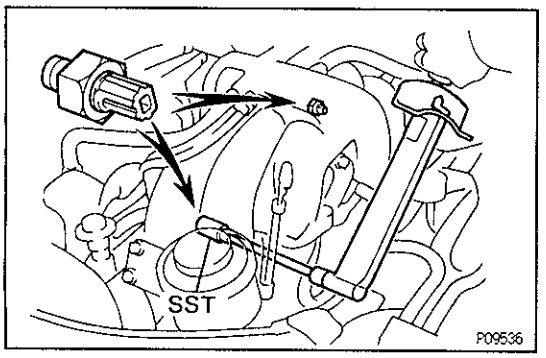

3. REINSTALL KNOCK SENSOR

(a) Using SST, install the knock sensor.
SST 09816–30010
Torque: 44 N·m (450 kgf·cm, 33 ft·lbf)

(b) Connect the knock sensor connector.