ECU

ELECTRONIC CONTROL UNIT

EG0E8-07

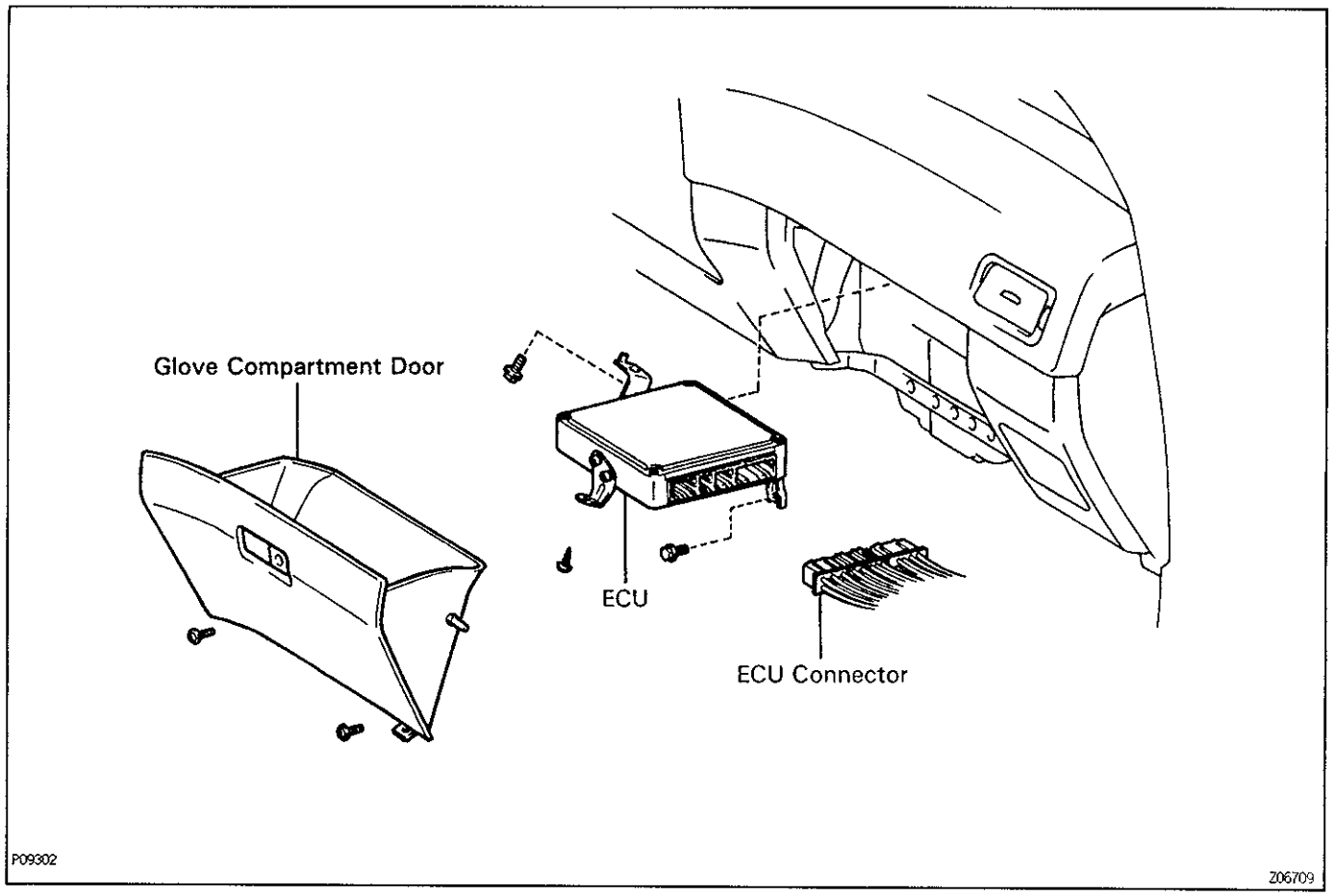

ECU INSPECTION

EG1ST-02

HINT: The EFI circuit can be checked by measuring the resistance and voltage at the wiring connectors of the ECU.

1. **REMOVE GLOVE COMPARTMENT DOOR**

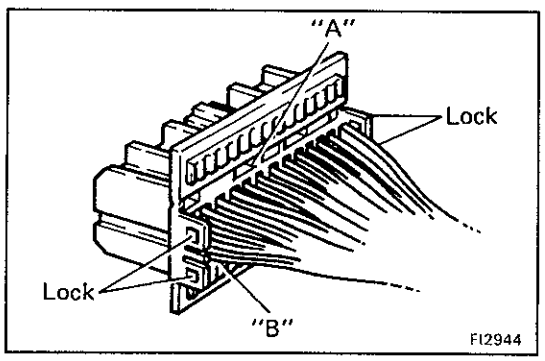

2. **PREPARATION**

(a) Disconnect the four connectors from the ECU.

(b) Remove the locks as shown in the illustration so that the tester probe(s) can easily come in.

NOTICE: Pay attention to sections "A" and "B" in the illustration which can easily broken.

(c) Reconnect the four connectors to the ECU.

EG

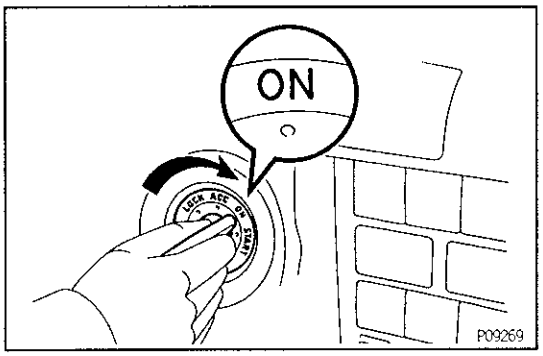

3. INSPECT VOLTAGE OF ECU

(a) Turn the ignition switch ON.

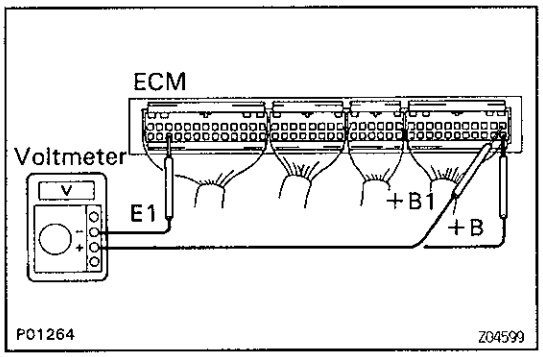

(b) Measure the voltage between each terminal of the wiring connectors.

HINT:

- Perform all voltage measurements with the connectors connected.
- Verify that the battery voltage is 11 V or more when the ignition switch is ON.

ECU Wiring Connectors Voltage

Terminals	Condition		STD voltage (V)
BATT – E1	–		9 – 14
IG SW – E1	IG SW ON		
M-REL – E1			
+B, +B1 – E1			
IDL – E2	IG SW ON	Throttle valve open	9 – 14
VCC – E2		–	4.5 – 5.5
VTA – E2		Throttle valve fully closed (Throttle opener must be cancelled first)	0.3 – 0.8
		Throttle valve fully open	3.2 – 4.9
VCC – E2		–	4.5 – 5.5
VS – E2		Measuring plate fully closed	3.5 – 4.5
		Measuring plate fully open	0.2 – 0.5
	Idling		1.2 – 2.4
	3,000 rpm		0.8 – 1.3

A/T

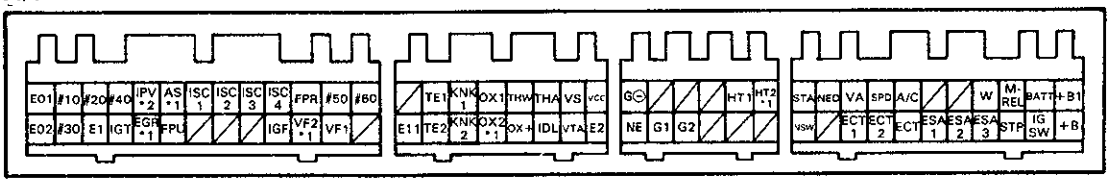

*1: Only for Europe

*2: Ex. GCC

M/T

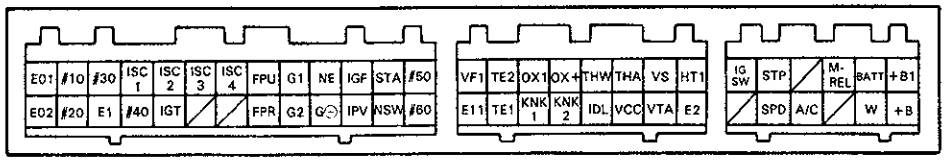

P01399
P01821

V02833

ECU Wiring Connectors Voltage (Cont'd)

Terminals	Condition		STD voltage (V)
#10 ⟆ #60 – E01 E02	IG SW ON		9 – 14
THA – E2	IG SW ON	Intake air temp. 20°C (68°F)	0.5 – 3.4
THW – E2		Engine coolant temp. 80°C (176°F)	0.2 – 1.0
STA – E1	Cranking		6 or more
IGT – E1	Idling		Pulse generation
ISC1 ⟆ ISC4 – E1	IG SW ON		9 – 14
W – E1	No trouble (malfunction indicator lamp light off) and engine running		9 – 14
IGF – E1	IG SW ON		2.0 or less
G1 G2 – G⊖	Idling		Pulse generation
NE – G⊖			
KNK1 KNK2 – E1			
VF1 VF2*1 – E1	Maintain engine speed at 2,500 rpm for 120 seconds after warming up then return to idling		1.8 – 3.2
NSW – E1	IG SW ON	Shift position P or N	3 or less
		Ex. shift position P or N	9 – 14
SPD – E1		Rotate driving wheel slowly	Pulse generation
TE1 TE2 – E1		Data link connector 1 TE1 – E1 not connected	9 – 14
		Data link connector 1 TE1 – E1 connected	1.5 or less
A/C – E1		Air conditioning ON	7.5 – 14
		Air conditioning OFF	1.5 or less
STP – E1	Stop light SW ON (Brake pedal depressed)		7.5 – 14
	Stop light SW OFF		1.5 or less

A/T

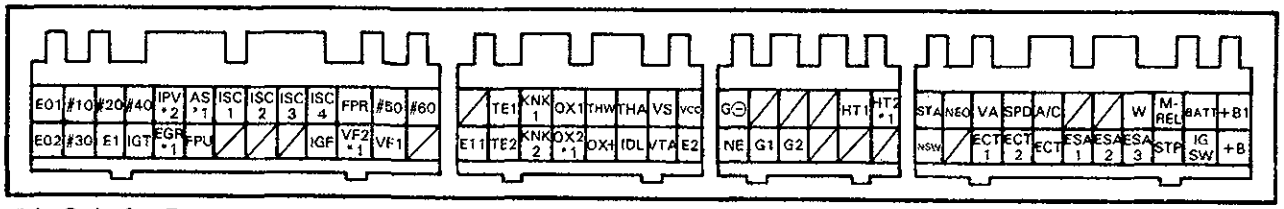

*1: Only for Europe

*2: Ex. GCC

M/T

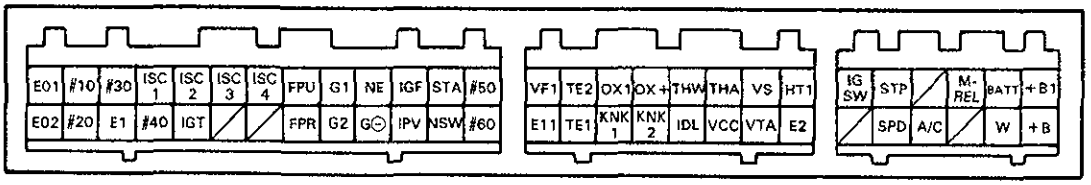

P01399
P01821

V02832

EG

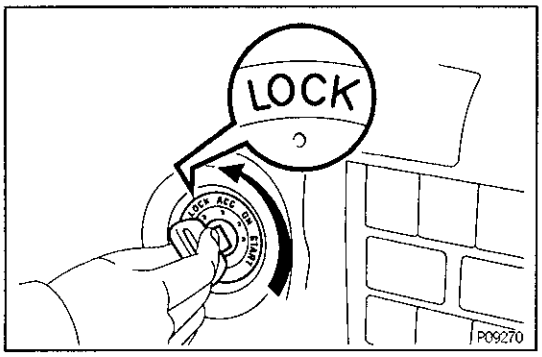

4. INSPECT RESISTANCE OF ECU MODULE

(a) Turn the ignition switch OFF.

(b) Disconnect the four connectors from the ECU.

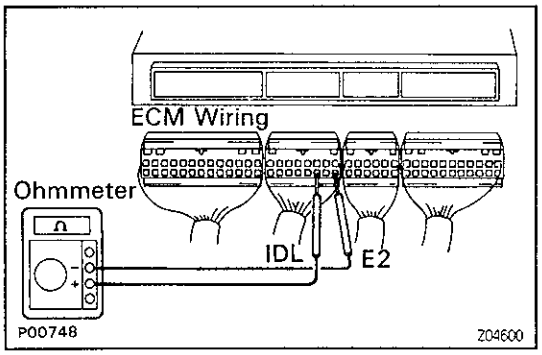

(c) Measure the resistance between each terminal of the wiring connectors.

NOTICE:

- **Do not touch the ECU terminals.**
- **The tester probe should be inserted in the wiring connector from the wiring side.**

ECU Wiring Connectors Resistance

Terminals	Condition	STD resistance (Ω)
IDL – E2	Throttle valve open	Infinity
	Throttle valve fully closed (Throttle opener must be cancelled first)	2,300 or less
VTA – E2	Throttle valve fully open	2,000 – 10,200
	Throttle valve fully closed (Throttle opener must be cancelled first)	200 – 5,700
VCC – E2	–	2,500 – 5,900
VS – E2	Measuring plate fully closed	200 – 600
	Measuring plate fully open	20 – 1,200
THA – E2	Intake air temp. 20°C (68°F)	2,000 – 3,000
THW – E2	Engine coolant temp. 80°C (176°F)	200 – 400
G1, G2 – G⊖	Cold (–10°C (14°F) to 50°C (122°F))	185 – 275
	Hot (50°C (122°F) to 100°C (212°F))	240 – 325
NE – G⊖	Cold (–10°C (14°F) to 50°C (122°F))	185 – 275
	Hot (50°C (122°F) to 100°C (212°F))	240 – 325
ISC1 ~ ISC4 – +B, +B1	–	10 – 30

A/T

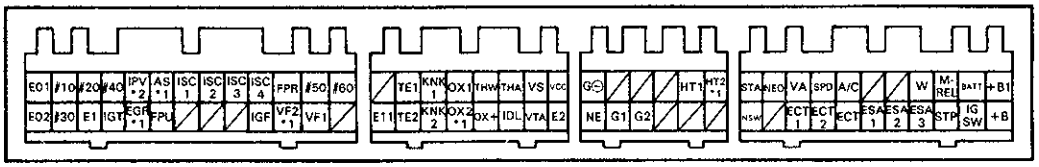

*1: Only for Europe

*2: Ex. GCC

M/T

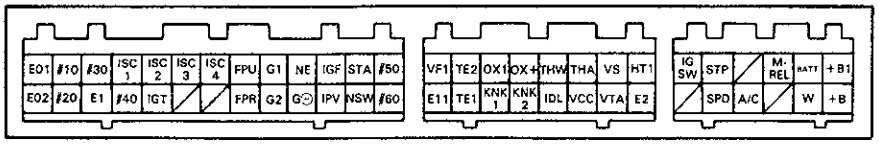

P01399
P01821

V02834