FUEL SYSTEM

DESCRIPTION

EG

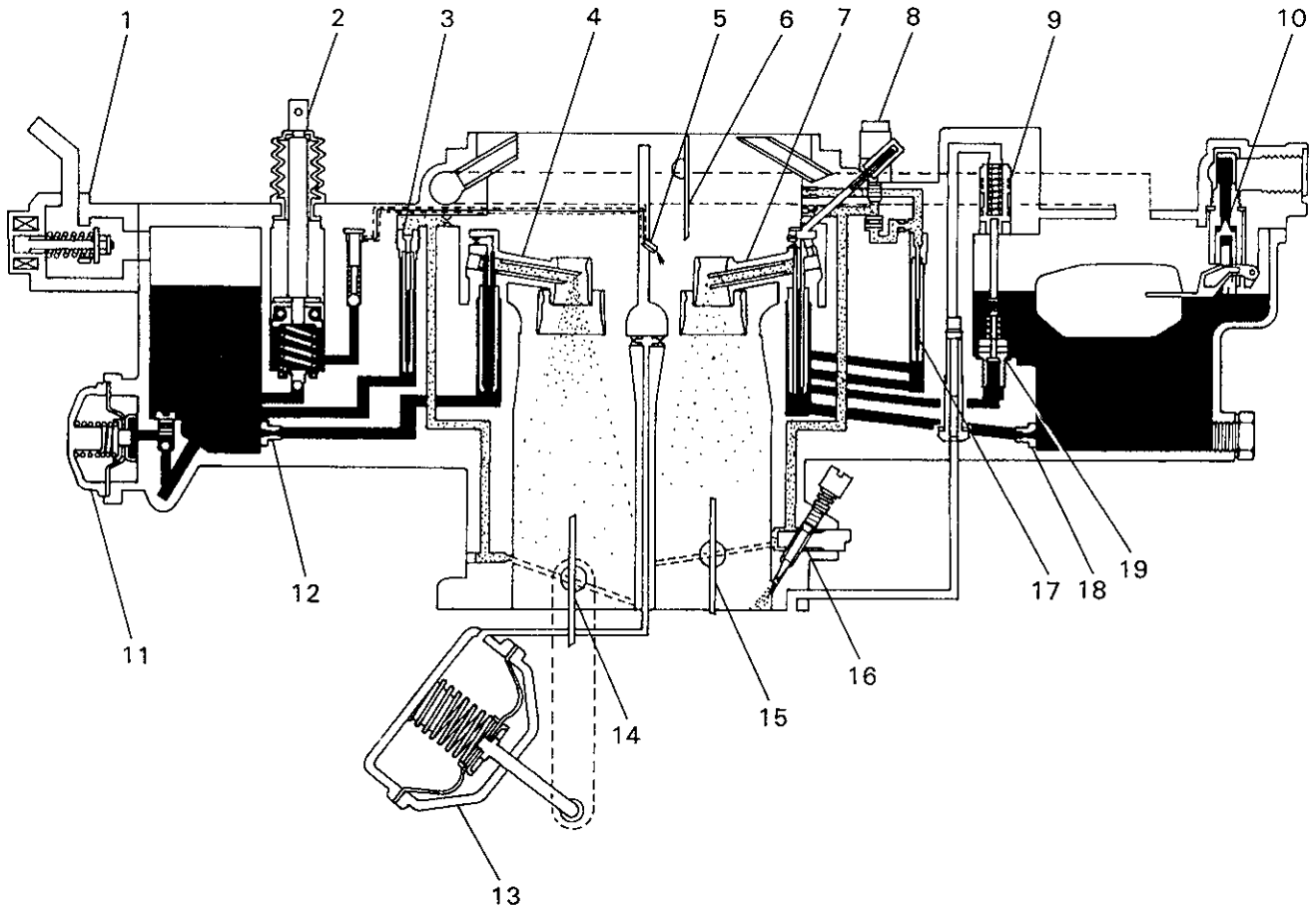

1. Outer Vent Control Valve (OVCV)
2. Acceleration Pump Plunger
3. Secondary Slow Jet
4. Secondary Main Nozzle
5. Acceleration Nozzle
6. Choke Valve
7. Primary Main Nozzle
8. Fuel Cut Solenoid Valve
9. Power Piston
10. Needle Valve
11. Auxiliary Acceleration Pump (AAP)
12. Secondary Main Jet
13. Secondary Throttle Valve Diaphragm
14. Secondary Throttle Valve
15. Primary Throttle Valve
16. Idle Mixture Adjusting Screw
17. Primary Slow Jet
18. Primary Main Jet
19. Power valve

CARBURETOR

In this type of double barrel carburetor, air and fuel are mixed in a single barrel (venturi chamber) when the engine is under comparatively light loads, as when driving at low to medium speeds. When the engine is under a heavy load or is running at high speeds, air and fuel are mixed in both barrels (venturi chambers).

The carburetor utilizes venturi vacuum to spray the required gasoline mixture through the main nozzle to the intake manifold. The carburetor consists of a venturi which detects the airflow, a main jet and nozzle which measures the amount of fuel, and a throttle valve and other parts which are used to adjust the intake air pressure. Gasoline fed from the fuel pump accumulates for a short time in the float chamber, with float assuring that the amount is always constant. In the engine intake process, when a piston moves downward inside a cylinder, the air in the chamber becomes thin. This causes air to flow into the cylinder from air cleaner through the carburetor and intake manifold. The speed of this air is increased when it passes through the narrowed portion of the carburetor body, that is, the venturi. The pressure drops in this area and results in gasoline being sprayed from the main nozzle in a jet. The amount of gasoline sprayed is determined mainly by the airflow in response to the amount the throttle valve is opened, and by the venturi vacuum. The sprayed gasoline is scattered by the flow of high speed air and vaporized, then this gas mixture is conducted into intake manifold.

Float System

The float system temporarily stores gasoline sent from the fuel pump and also serves the function of maintaining the amount of accumulated fuel (the fuel level) at a constant level.

Primary Low Speed System

The primary low speed system is used to supply gasoline for low engine speeds, when the throttle valve is opened only an extremely small amount.

Solenoid Valve

Turning off the ignition switch closes the solenoid valve and stops the supply of fuel to the low speed circuit. Turning the ignition switch on causes current to flow through the solenoid valve coil, opening the valve and allowing the supply of fuel to the low speed circuit.

Primary High Speed System

The primary high speed system is the most used operating system, in which the negative pressure generated by the passage of air through the venturi is used to suck out gasoline. This system operates to mix fuel for a wide range of speeds, and therefore has a great influence on the performance of the carburetor. The high speed system is designed to deliver an economical mixing ratio. However, auxiliary systems such as the acceleration system or the power system are used when a larger output is required.

Secondary Low Speed System

The flow rate through the venturi on the secondary side is low when the secondary throttle valve is opened only a little, and no gasoline is sprayed from the secondary main nozzle. Only air is sucked in from the secondary side. Since the gas mixture is lean, the secondary side low speed system is prevented from operating.

Secondary High Speed System

The primary high speed side operates during low output, when only a small amount of air is sucked in. However, during medium or high output, when a large amount of air is sucked in, the primary high speed side is inadequate for supplying enough fuel mixture. Therefore, the throttle valve on the secondary side opens, permitting use of both high speed systems. The construction of the secondary high speed system is the same as that of the primary high speed system, but since the secondary high speed system is used when the engine is delivering a greater output, the secondary high speed system is designed with larger nozzle, venturi and jet than the primary side.

Power System

The primary high speed system is designed to use fuel economically. However, when the engine's output is high, a greater quantity of fuel is required than can be delivered by the primary high speed system. The extra fuel required for high output is supplied through the power system, which delivers a rich gas mixture to the high speed system.

Acceleration System

Depressing the accelerator pedal suddenly during normal driving requires an increase in the engine's output, and at such a time, the carburetor must supply a rich gas mixture to the engine. However, even though the amount of air is increased immediately when the throttle valve is opened, the gas mixture becomes temporarily diluted due to the weight of the gasoline being greater than that of air. The acceleration system has been adopted to prevent this delay by supplying a rich gas mixture during acceleration.

The acceleration pump always operates, regardless of the coolant temperature, but the auxiliary acceleration pump (AAP) operates only when the coolant temperature is low.

Choke System

The choke system makes it easier to start the engine when the temperature is low. At such times, cranking speed is lower and as a result, the intake negative pressure is also lower, reducing the amount of fuel supplied. In addition, since the intake manifold is cold, gasification of fuel is poor and the gas mixture delivered to the combustion chamber is thin, making starting difficult. The choke system supplies a rich gas mixture to the intake manifold to overcome this problem.

Outer Vent Control Valve (OVCV)

While the engine is stopped, if gasoline vapor from the float chamber passes through the air vent and a large amount collects in the intake manifold, engine restartability will decline. To prevent this, an outer vent control valve (OVCV) is fitted. When the engine is stopped, this valve opens and releases the gasoline vapor from the carburetor to be absorbed by charcoal cannister, from where it is drawn to the engine during.

FUEL FILTER

Gasoline used for fuel contains a small proportion of dirt or moisture. If permitted to reach the narrow channels of the carburetor or the jet nozzle, these contaminants would soon clog them and cause the engine to stall. The fuel filter is designed to remove the dirt and moisture from fuel. Fuel passes through an element in the filter. This element slows the rate of flow of the fuel, causing the moisture and particles of dirt, etc. to settle out. The lighter contaminants are filtered by the filter element.

FUEL PUMP

The fuel pump pumps fuel from the fuel tank and delivers it to the carburetor. The fuel pump in this engine is a mechanical type (diaphragm type) pump which is operated directly by the camshaft.

The diaphragm type fuel pump uses a diaphragm, which moves up and down in a pump chamber. Two valves are located in the each pump chamber opposite the direction of operation. This up and down motion of the diaphragm creates a pumping action.