ON–VEHICLE INSPECTION

EG0UT–01

1. **REMOVE INTAKE AIR CONNECTOR FROM CARBURETOR**
2. **INSPECT CARBURETOR AND LINKAGE**

(a) Check that the various set screws, plugs and union bolts are tight and correctly installed.

(b) Check the linkage for excessive wear and missing snap rings.

(c) Check that the throttle valves open fully when the accelerator pedal is fully depressed.

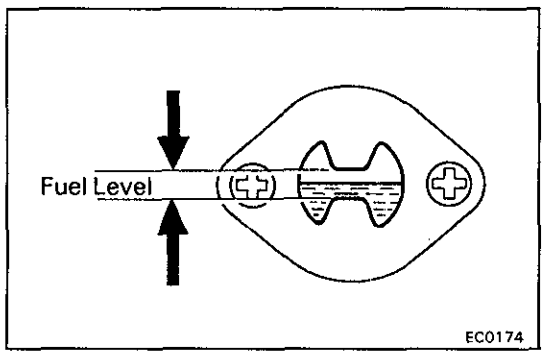

3. **INSPECT FLOAT LEVEL**

Check that the float level is about even with the correct level in the sight glass.

If not, check the carburetor needle valve and float level, and adjust or repair, as necessary.

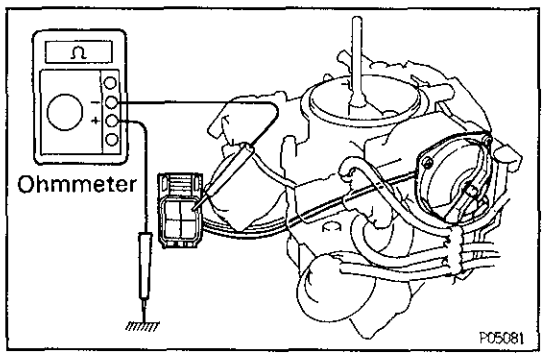

COLD ENGINE

4. **INSPECT AUTOMATIC CHOKE SYSTEM**

(a) Disconnect the wiring connector.

(b) Using an ohmmeter, measure the resistance between the coil housing terminal (red wire) and body ground.

Resistance:

17 – 19 Ω at 20°C (68°F)

(c) Connect the wiring connector.

(d) Start the engine.

(e) Shortly after, check that the choke valve begins to open and the coil housing (choke heater) is heated.

(f) Stop the engine.

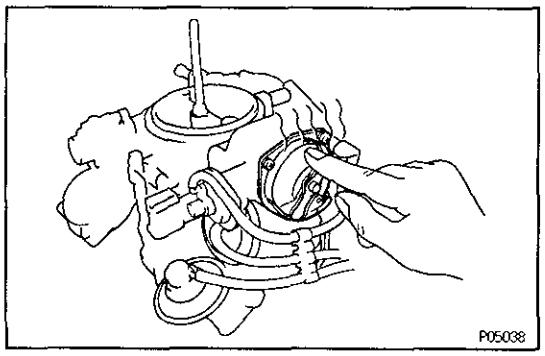

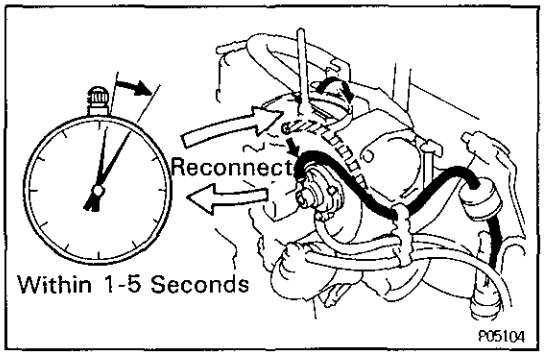

EG

5. INSPECT CHOKE BREAKER (CB) SYSTEM

(a) Start the engine.

(b) Disconnect the vacuum hose from the CB and check that the choke valve moves.

(c) Reconnect the vacuum hose to the CB and check that the choke valve moves within the specified time after reconnecting the hose.

Time:

1 – 5 seconds

(d) Stop the engine.

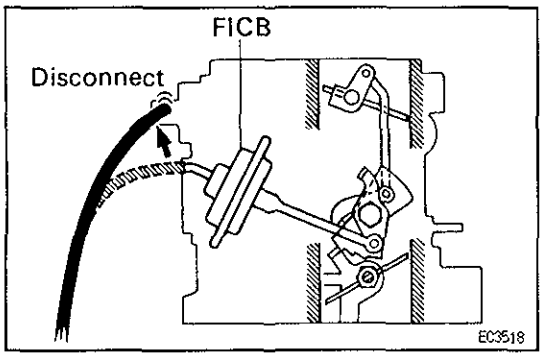

6. INSPECT FAST IDLE CAM BREAKER (FICB) SYSTEM

(a) Disconnect the vacuum hose from the FICB.

(b) With the coolant temperature below 40°C (104°F), step down on the accelerator pedal and release it.

(c) Start the engine.

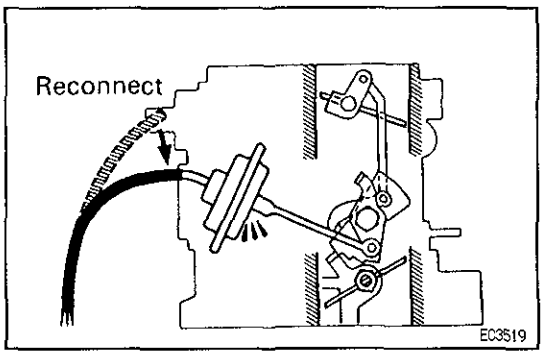

(d) Reconnect the vacuum hose and check that the choke linkage does not move.

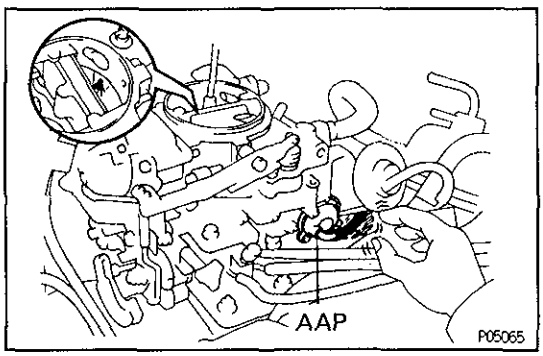

7. INSPECT AUXILIARY ACCELERATION PUMP (AAP) SYSTEM

(a) Check that the coolant tempeature is below 50°C (122°F).

(b) Start the engine.

(c) Pinch the AAP hose, and stop the engine.

(d) Release the hose.

(e) Check that gasoline spurts out from the acceleration nozzle.

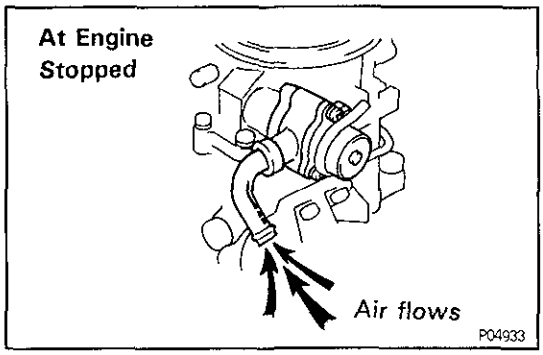

8. INSPECT OUTER VENT CONTROL VALVE (OVCV) OPERATION

(a) Disconnect the outer vent hose from the carburetor.

(b) Blow air into the outer vent pipe and check that the OVCV is open.

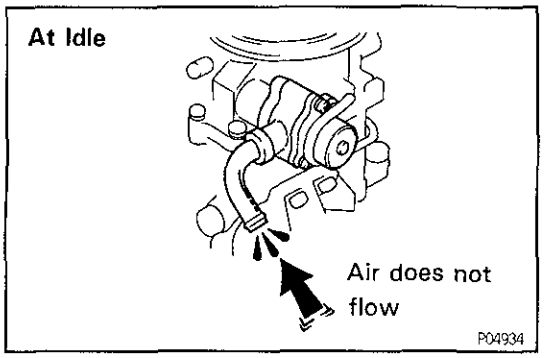

(c) Start the engine.
(d) With the engine idling, blow air into the outer vent pipe and check that the OVCV is closed.

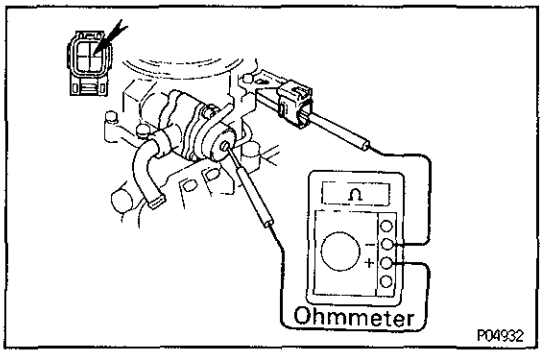

(e) Disconnect the carburetor connector.
(f) Using an ohmmeter, measure the resistance between the OVCV terminal of the carburetor connector and body ground.
Resistance (Cold):
32 – 38 Ω
(g) Reconnect the outer vent hose.

HOT ENGINE

9. CHECK FAST IDLE CAM BREAKER (FICB) SYSTEM

(a) Warm up the engine to normal operating temperature and stop the engine.
(b) Disconnect the vacuum hose from the FICB.

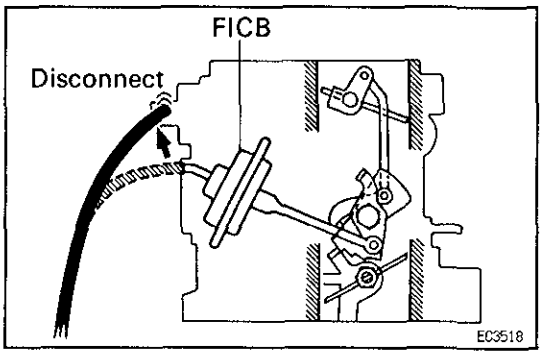

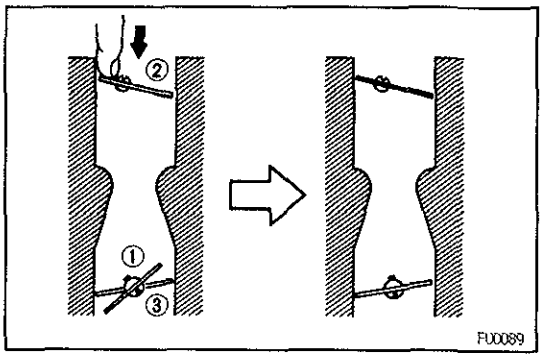

(c) Set the fast idle cam. While holding the throttle slightly open, push the choke valve closed, and hold it closed as you release the throttle valve.
(d) Start the engine, but to do not touch the accelerator pedal.

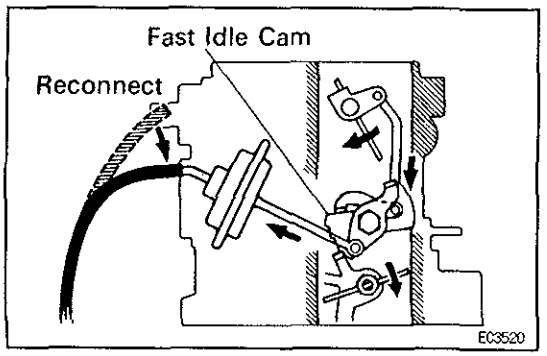

(e) Reconnect the vacuum hose, and check that the choke linkage moves, and that the fast idle cam is released to the 4th step.

10. INSPECT CHOKE VALVE

Check that the choke valve opens fully.

EG

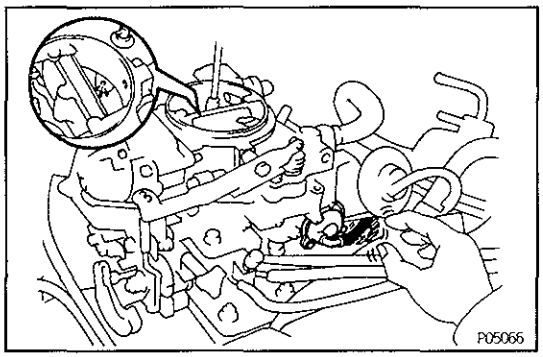

11. INSPECT AUXILIARY ACCELERATIONS PUMP (AAP) SYSTEM

(a) *Warm up the engine to normal operating temperature.*

(b) Start the engine.
(c) Pinch the AAP hose, and stop the engine.
(d) Release the hose.
(e) Check that gasoline does not spurt out from the acceleration nozzle.

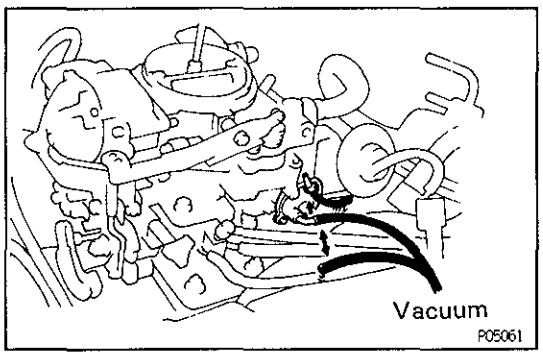

12. INSPECT AUXILIARY ACCELERATION PUMP (AAP) DIAPHRAGM

(a) Start the engine.
(b) Disconnect the hose from the AAP.
(c) Apply and release the vacuum directly to the AAP at idle.
(d) *Check that the engine rpm changes by releasing* vacuum.
(e) Reconnect the AAP hose.

If a problem is found, replace the AAP diaphragm.

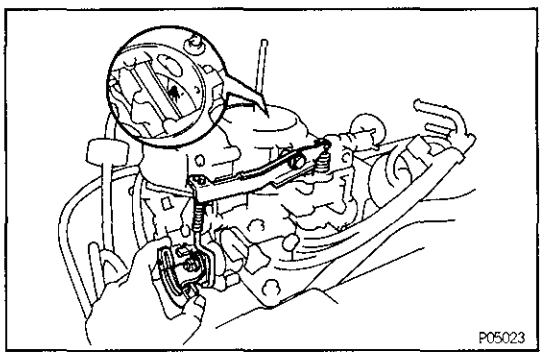

13. INSPECT ACCELERATION PUMP

Open the throttle valve, and check that gasoline spurts out from the acceleration nozzle.

14. INSTALL AIR INTAKE CONNECTOR
15. CHECK AND ADJUST IDLE SPEED AND IDLE MIXTURE
16. CHECK AND ADJUST FAST IDLE SPEED
17. CHECK AND ADJUST DASH POT (DP) SETTING SPEED
18. CHECK AND ADJUST THROTTLE POSITIONER (TP) SETTING SPEED