THERMOSTAT

EG13D-03

COMPONENTS FOR REMOVAL AND INSTALLATION

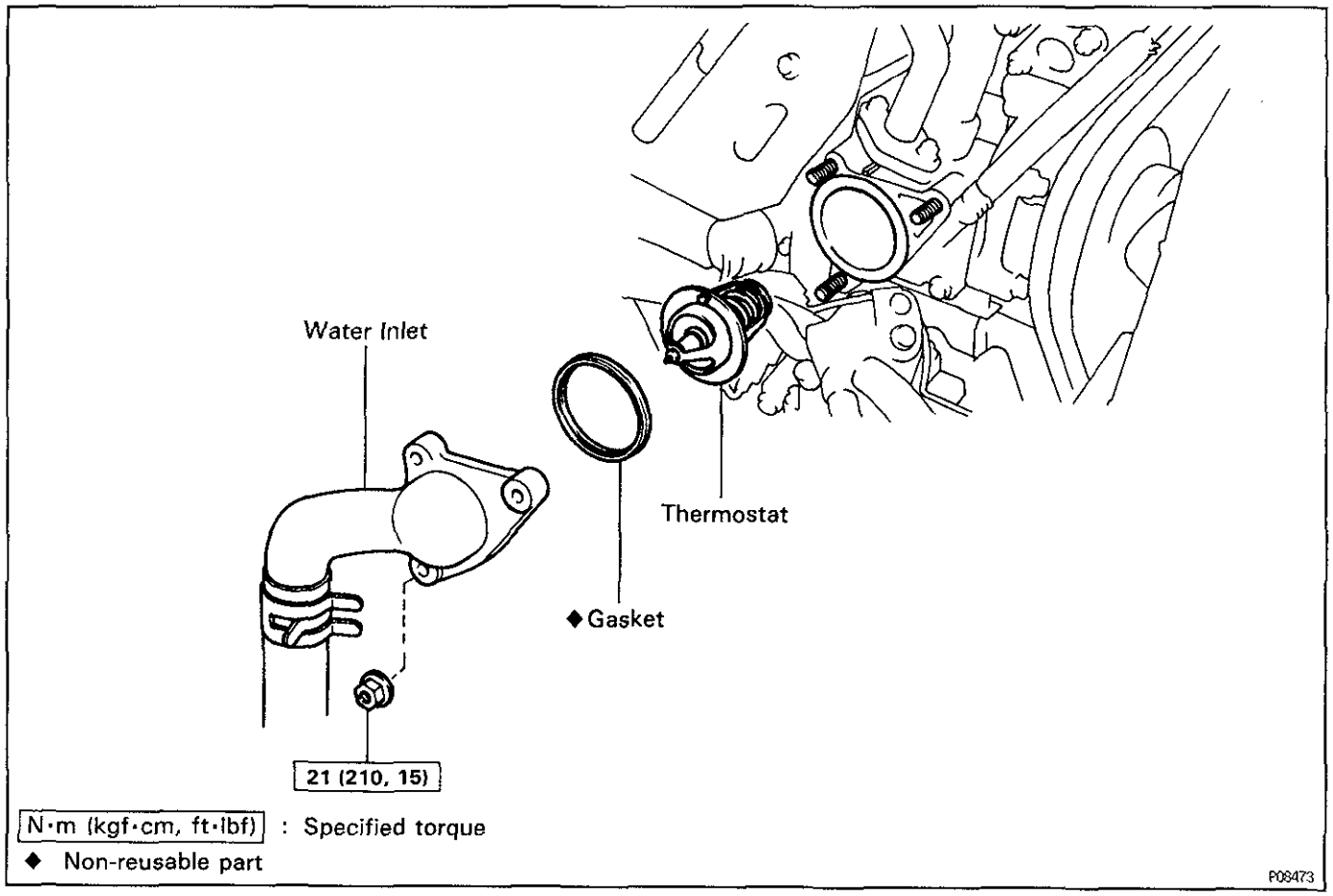

EG

THERMOSTAT REMOVAL

EG1J3-01

HINT: Removal of the thermostat would have an adverse effect, causing a lowering of cooling efficiency. *Do not remove the thermostat, even if the engine tends to overheat.*

1. DRAIN ENGINE COOLANT

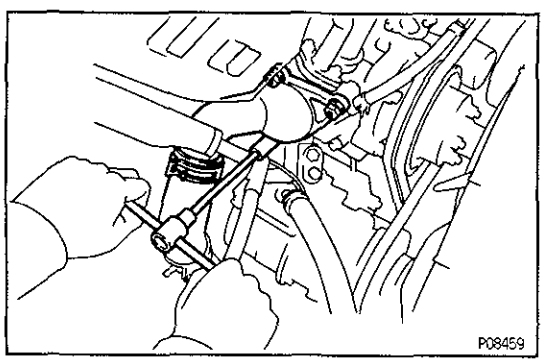

2. REMOVE WATER INLET AND THERMOSTAT

(a) Remove the three nuts holding the water inlet to the inlet housing, and disconnect the water inlet from the inlet housing.
(b) Remove the thermostat.
(c) Remove the gasket from the thermostat.

EG

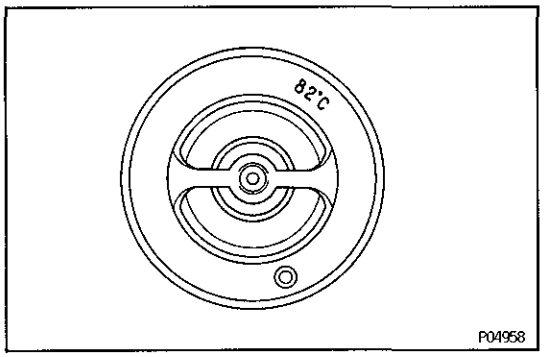

EG072-02

THERMOSTAT INSPECTION

INSPECT THERMOSTAT

HINT: The thermostat is numbered with the valve opening temperature.

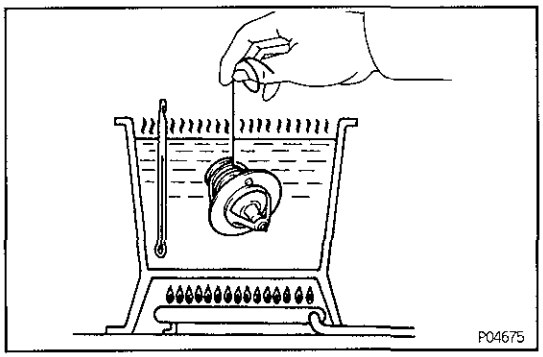

(a) Immerse the thermostat in water and gradually heat the water.

(b) Check the valve opening temperature.

Valve opening temperature:

80 – 84°C (176 – 183°F)

If the valve opening temperature is not as specified, replace the thermostat.

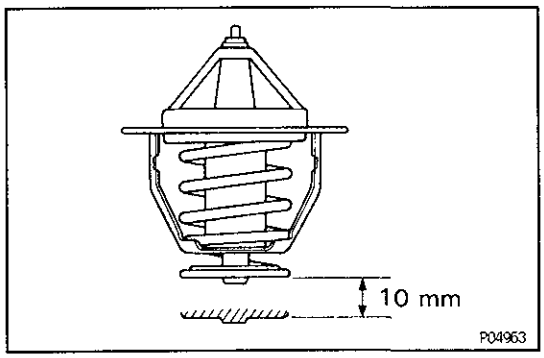

(c) Check the valve lift.

Valve lift:

10 mm (0.39 in.) or more at 95°C (203°F)

If the valve lift is not as specified, replace the thermostat.

(d) Check that the valve spring is tight when the thermostat is fully closed.

If not closed, replace the thermostat.

EG1J4–01

THERMOSTAT INSTALLATION

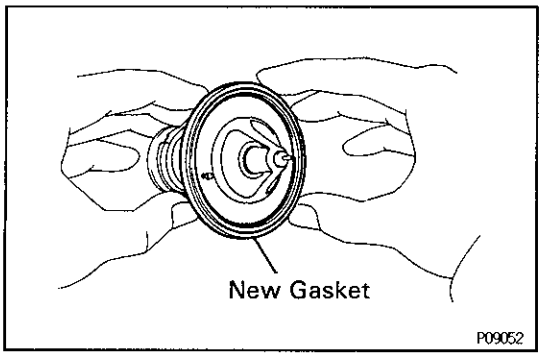

(See Components for Removal and Installation)

1. PLACE THERMOSTAT IN WATER PUMP

(a) Install a new gasket to the thermostat.

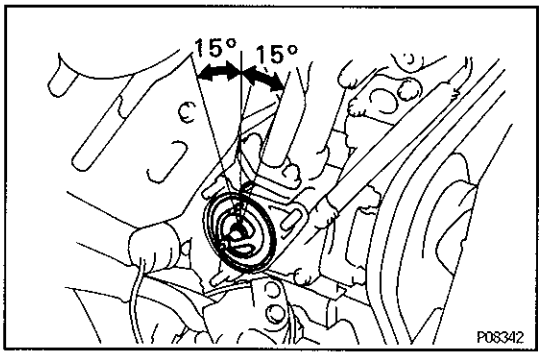

(b) Align the jiggle valve of the thermostat with the protrusion of the water inlet housing, and insert the thermostat in the water inlet housing.
HINT: The jiggle valve may be set within 15° of either side of the prescribed position.

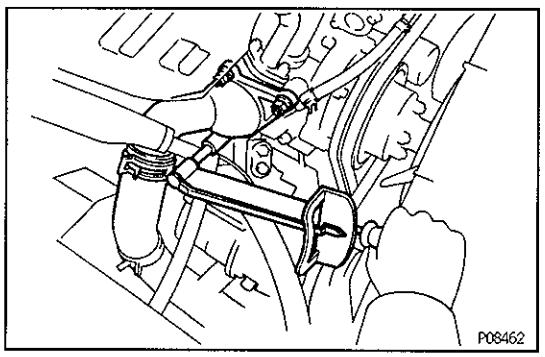

2. INSTALL WATER INLET

Install the water inlet with the three nuts.
Torque: 21 N·m (210 kgf·cm, 15 ft·lbf)

3. FILL WITH ENGINE COOLANT

4. START ENGINE AND CHECK FOR LEAKS