OIL PUMP

COMPONENTS FOR REMOVAL AND INSTALLATION

EG07X–07

EG

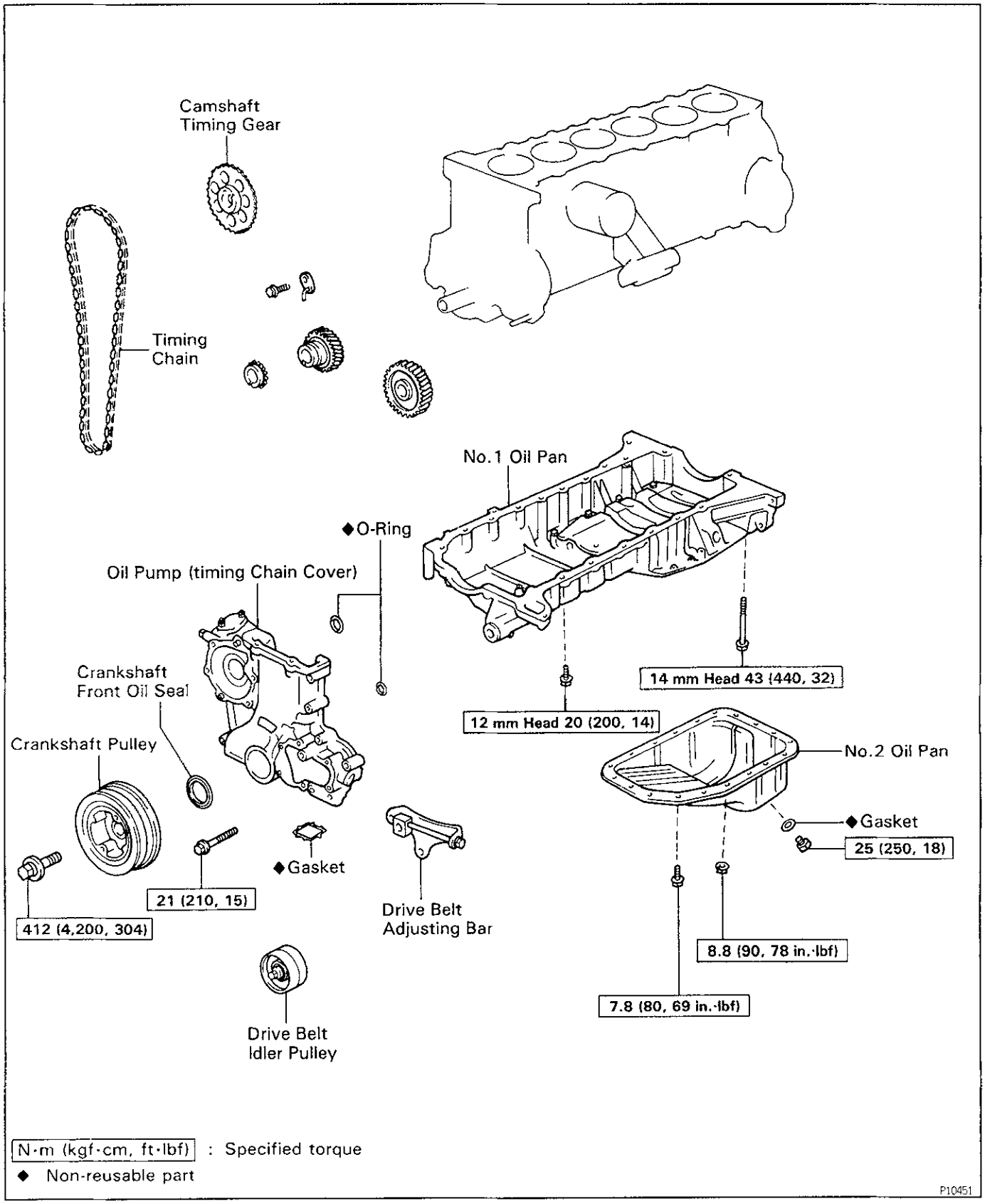

N·m (kgf·cm, ft·lbf) : Specified torque

◆ Non-reusable part

P10451

EG281-01

OIL PUMP REMOVAL

HINT: When repairing the oil pump, the oil pan and strainer should be removed and cleaned.

1. DRAIN ENGINE OIL

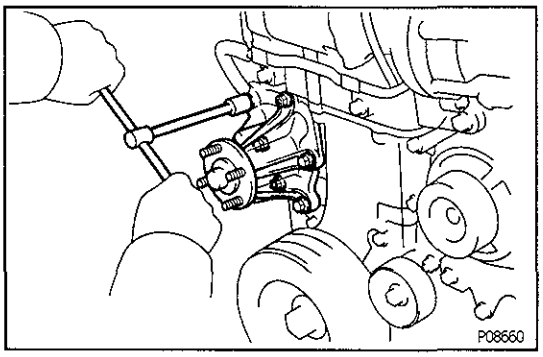

2. REMOVE WATER PUMP
Remove the four bolts, two nuts, water pump and gasket.

3. REMOVE CYLINDER HEAD
(See page EG—38 or 89)

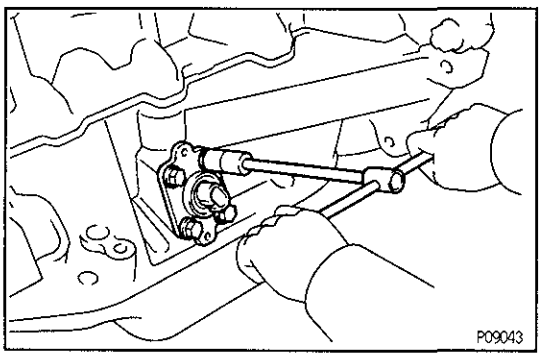

4. (Europe)
REMOVE OIL LEVEL SENSOR
(a) Remove the four bolts and level sensor.
(b) Remove the gasket from the level sensor.

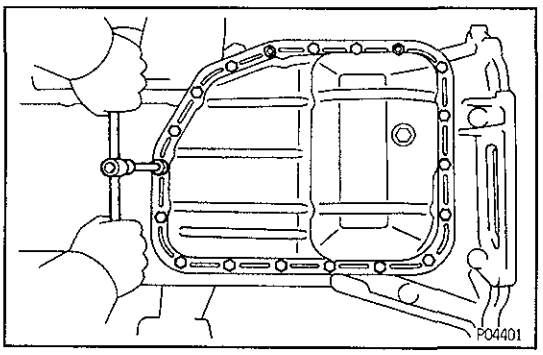

5. REMOVE NO.2 OIL PAN
(a) Remove the 17 mounting bolts and two nuts.

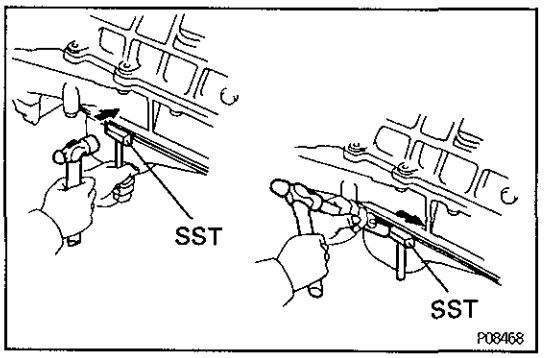

(b) Insert the blade of SST between the No.1 and No.2 oil pans, cut off applied sealer and remove the No.2 oil pan.
SST 09032—00100
NOTICE:
- **Be careful not to damage the No.2 oil pan contact surface of the No.1 oil pan.**
- **Be careful not to damage the oil pan flange.**

EG

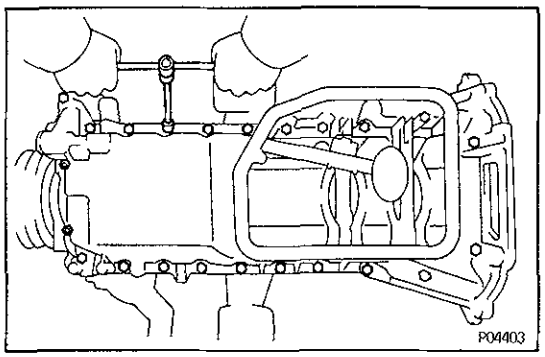

6. REMOVE NO.1 OIL PAN

(a) Remove the 21 mounting bolts and two nuts.

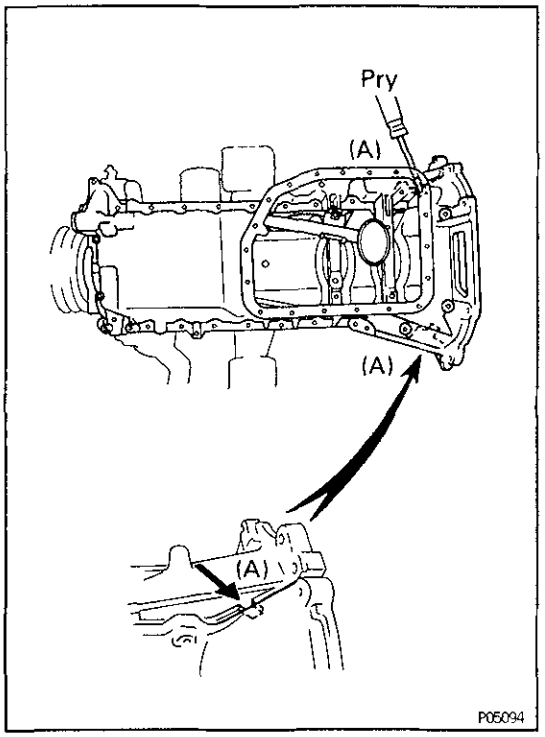

(b) Remove the No.1 oil pan by prying the portions (A) between the cylinder block and No.1 oil pan with a screwdriver.

NOTICE: Be careful not to damage the contact surfaces the cylinder block and No.1 oil pan.

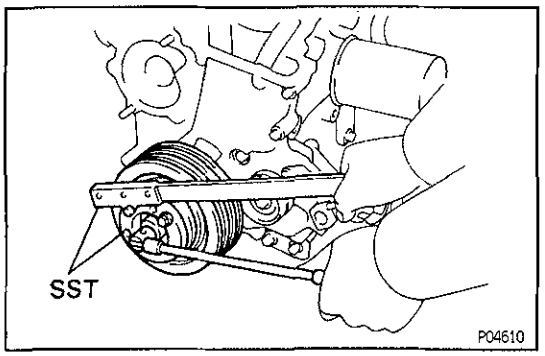

7. REMOVE CRANKSHAFT PULLEY

(a) Using SST, remove the pulley bolt.
SST 09213–58012, 09330–00021

(b) Remove the crankshaft pulley.

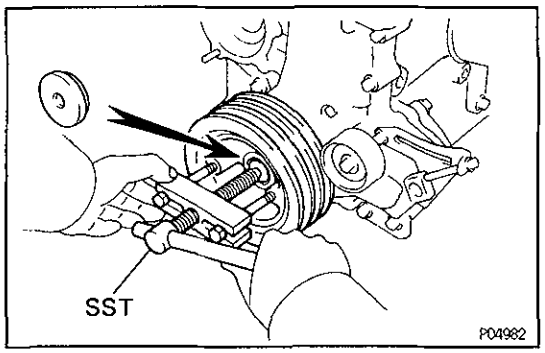

HINT: If necessary, remove the pulley with SST.
SST 09213–60017 (09213–00020, 09213–00030, 09213–00060), 09950–20017

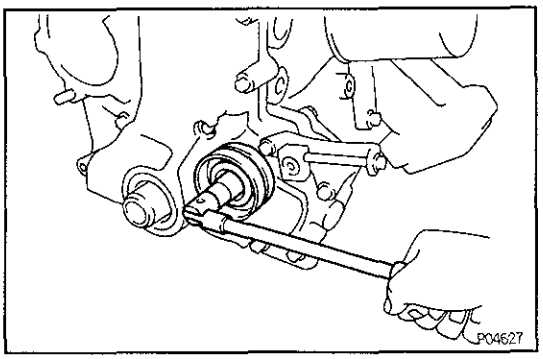

8. REMOVE DRIVE BELT IDLER PULLEY

Remove the bolt and idler pulley.

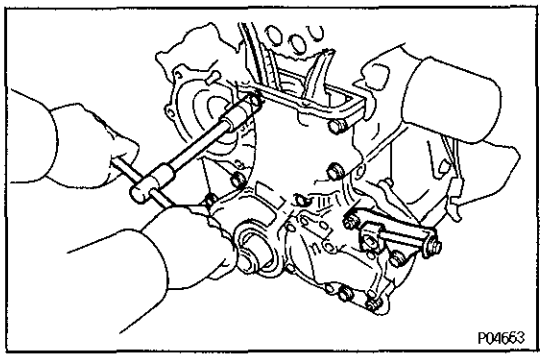

9. REMOVE OIL PUMP (TIMING CHAIN COVER)

(a) Remove the nine mounting bolts, two mounting nuts and drive belt adjusting bar.

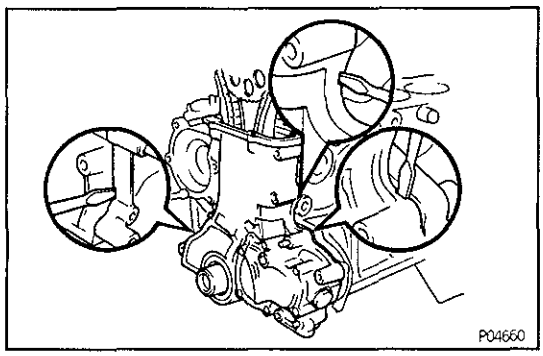

(b) Remove the oil pump by prying the portions betweeen the cylinder block and oil pump with a screwdriver.

NOTICE: Be careful not to damage the contact surfaces of the cylinder block and oil pump.

(c) Remove the O–rings from the oil pump.

(d) Remove the gasket from the oil pump.

EG

COMPONENTS FOR DISASSEMBLY AND ASSEMBLY

EG1JG-01

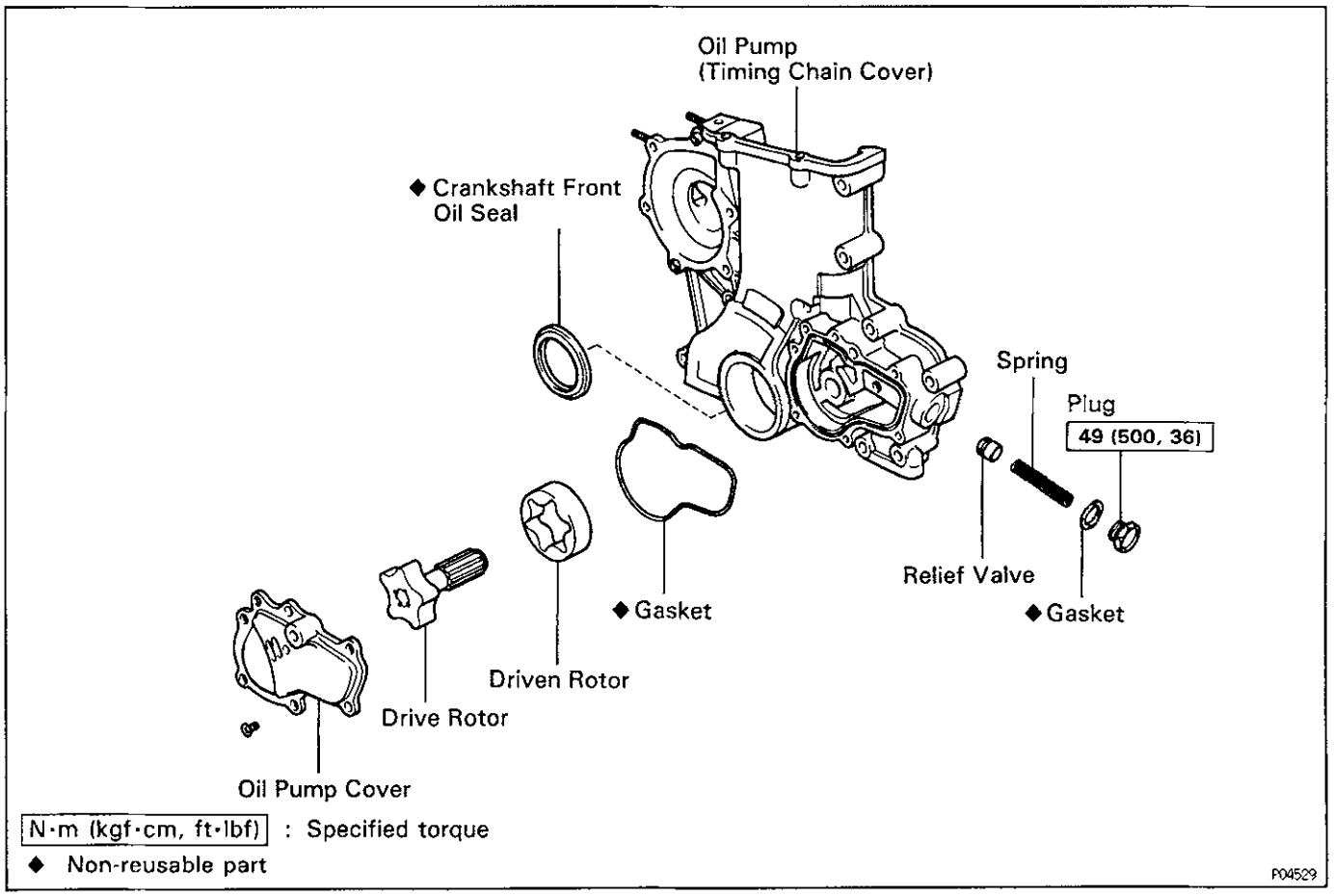

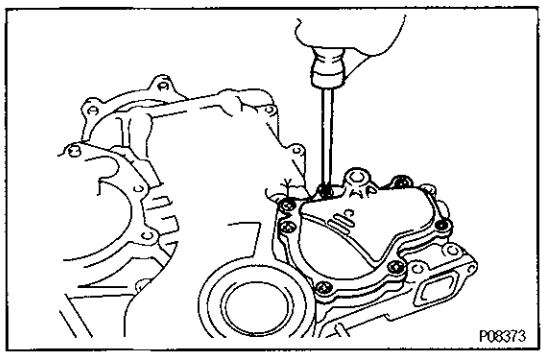

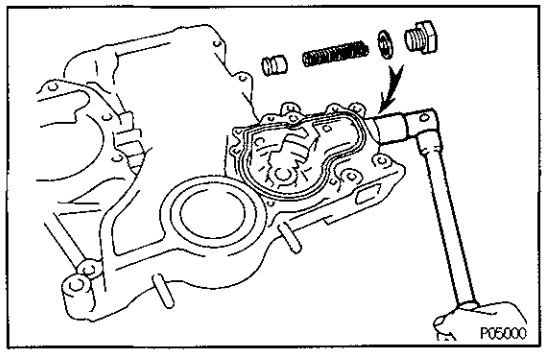

EC0NP-02

OIL PUMP DISASSEMBLY

1. REMOVE DRIVE AND DRIVEN ROTORS

Remove the seven screws, pump cover, drive rotor, driven rotor and gasket.

2. REMOVE RELIEF VALVE

Remove the plug, gasket, spring and relief valve.

EG09B-03

OIL PUMP INSPECTION

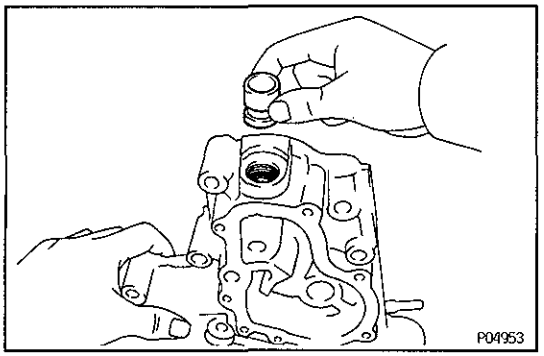

1. INSPECT RELIEF VALVE

Coat the valve with engine oil and check that it falls smoothly into the valve hole by its own weight.
If it does not, replace the relief valve. If necessary, replace the oil pump assembly.

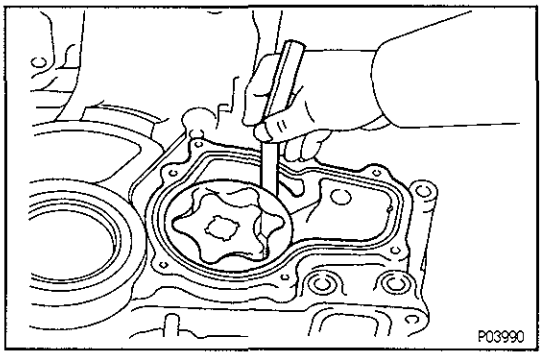

2. INSPECT DRIVE AND DRIVEN ROTORS

A. Inspect rotor body clearance

Using a thickness gauge, measure the clearance between the driven rotor and body.

Standard body clearance:

0.100 – 0.170 mm (0.0039 – 0.0067 in.)

Maximum body clearance:

0.30 mm (0.0118 in.)

If the body clearance is greater than maximum, replace the rotors as a set. If necessary, replace the oil pump assembly.

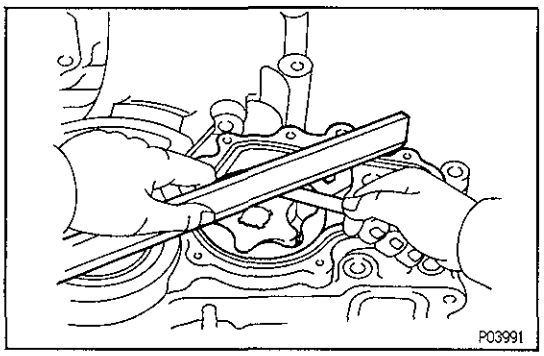

B. Inspect rotor side clearance

Using a thickness gauge and precision straight edge, measure the clearance between the rotors and precision straight edge.

Standard side clearance:

0.030 – 0.090 mm (0.0012 – 0.0035 in.)

Maximum side clearance:

0.15 mm (0.0059 in.)

If the side clearance is greater than maximum, replace the rotors as a set. If necessary, replace the oil pump assembly.

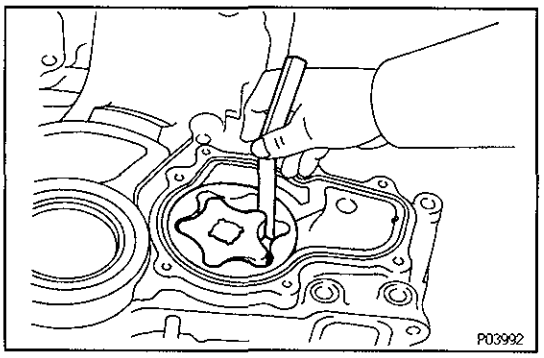

C. Inspect rotor tip clearance

Using a thickness gauge, measure the clearance between the drive and driven rotor tips.

Standard tip clearance:

0.030 – 0.160 mm (0.0012 – 0.0063 in.)

Maximum tip clearance:

0.25 mm (0.0098 in.)

If the tip clearance is greater than maximum, replace the rotors as a set.

EG081–04

CRANKSHAFT FRONT OIL SEAL REPLACEMENT

HINT: There are two methods (A and B) to replace the oil seal which are as follows:

EG

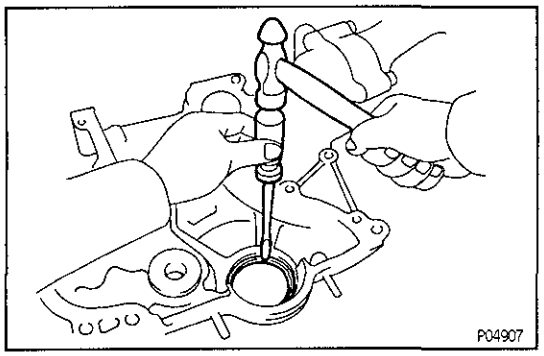

REPLACE CRANKSHAFT FRONT OIL SEAL

A. If oil pump is removed from cylinder block:

(a) Using a screwdriver and a hammer, tap out the oil seal.

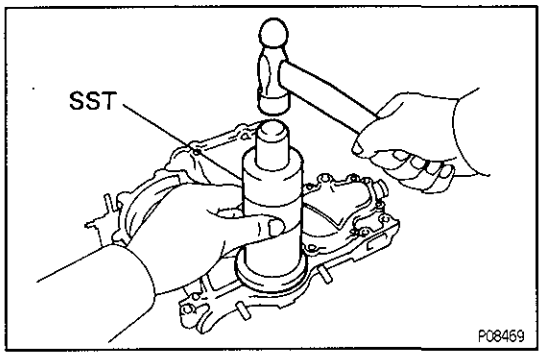

(b) Using SST and a hammer, tap in a new oil seal until its surface is flush with the oil pump case edge.
SST 09316–60010 (09316–00010, 09316–00050)

(c) Apply MP grease to the oil seal lip.

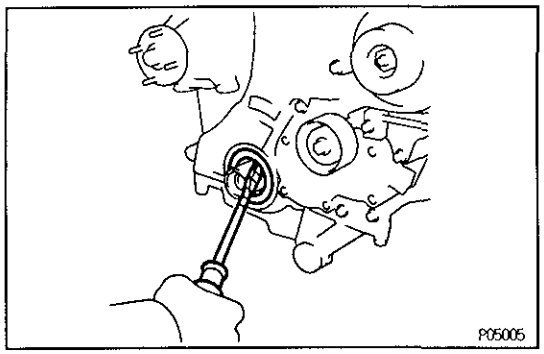

B. If oil pump is installed to the cylinder block:

(a) Using a screwdriver, pry out the oil seal.
NOTICE: Be careful not to damage the crankshaft. Tape the screwdriver tip.

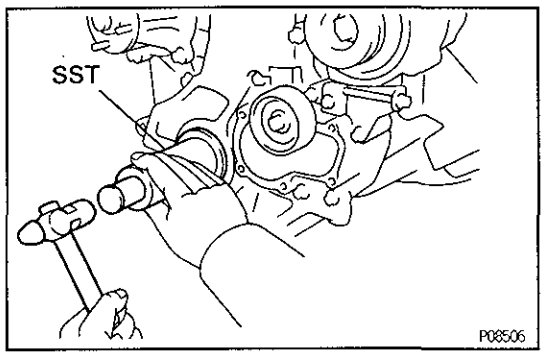

(b) Apply MP grease to a new oil seal lip.

(c) Using SST and a hammer, tap in the oil seal until its surface is flush with the oil pump case edge.
SST 09316–60010 (09316–00010, 09316–00050)

EG0NQ–03

OIL PUMP ASSEMBLY

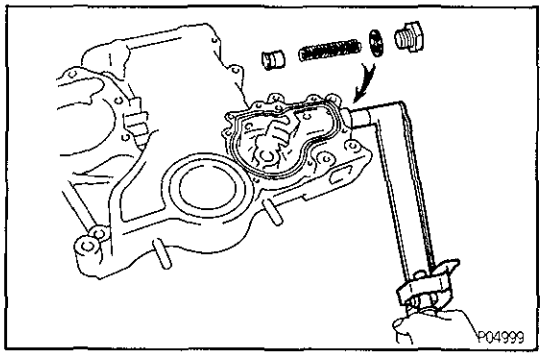

(See Components for Removal and Installation)

1. INSTALL RELIEF VALVE

(a) Insert the relief valve and spring into the pump body hole.

(b) Install a new gasket to the plug.

(c) Install and torque the plug.
Torque: 49 N·m (500 kgf·cm, 36 ft·lbf)

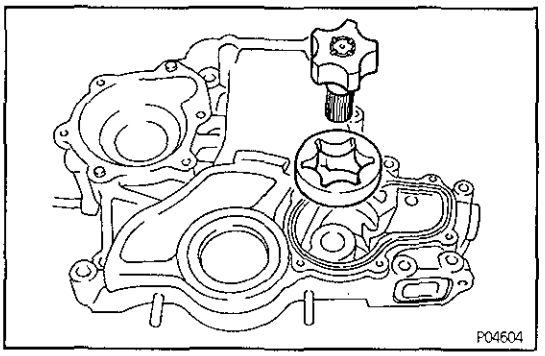

2. INSTALL DRIVE AND DRIVEN ROTORS

(a) Place the drive and driven rotors into the pump body.
NOTICE: *Apply engine oil to drive and driven rotors.*

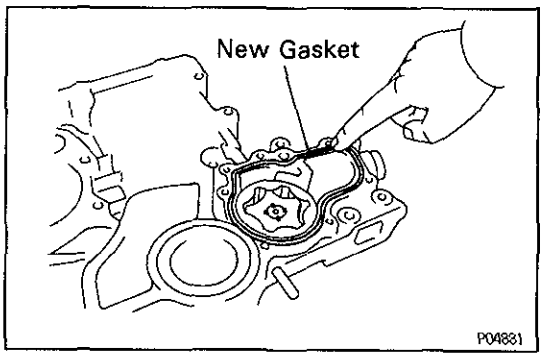

(b) Place a new gasket on the pump body.

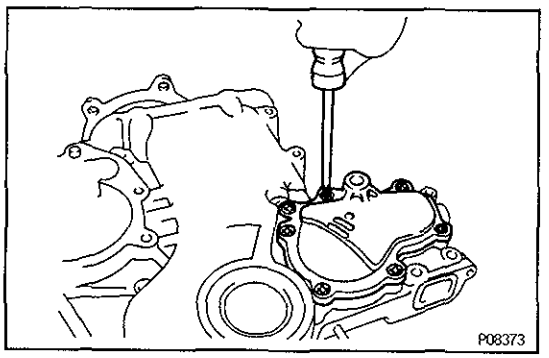

(c) Install the pump cover with the seven screws.

EG

EG

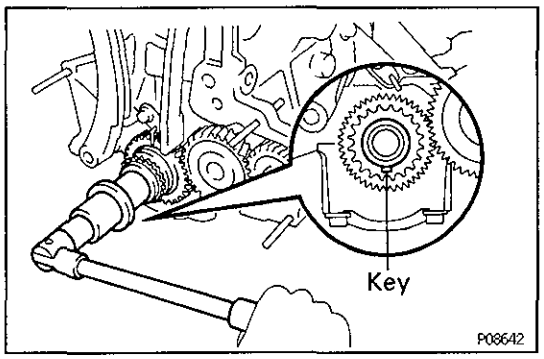

EG283-01

OIL PUMP INSTALLATION

(See Components for Removal and Installation)

1. SET CRANKSHAFT

Turn the crankshaft until the set key on the crankshaft facing downward.

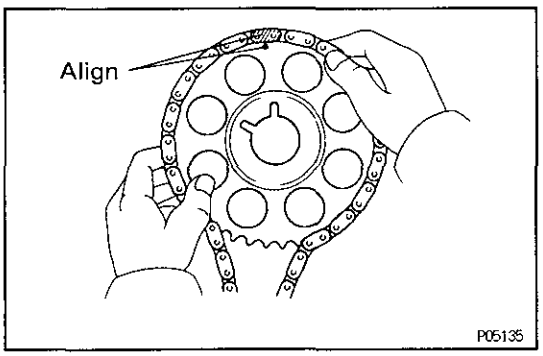

2. INSTALL TIMING CHAIN AND CAMSHAFT TIMING GEAR

(a) Install the timing chain on the camshaft timing gear with the bright link aligned with the timing mark on the camshaft timing gear.

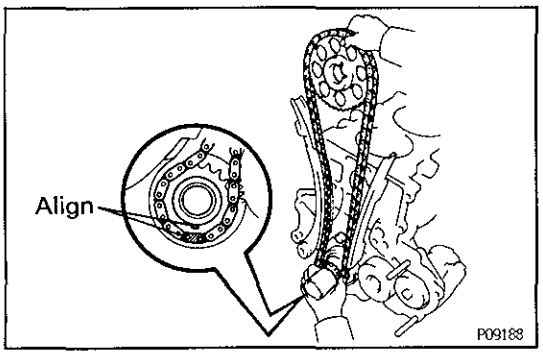

(b) Install the timing chain on the crankshaft timing gear with the other bright link aligned with the timing mark on the crankshaft timing gear.

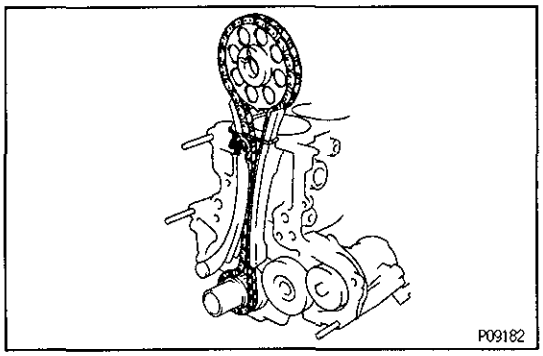

(c) Tie the timing chain with a cord as shown in the illustration and make sure it doesn't come loose.

3. INSTALL OIL PUMP (TIMING CHAIN COVER)

(a) Remove any old packing (FIPG) material and be careful not to drop an oil on the contact surfaces of the oil pump and cylinder block.

- Using a razor blade and gasket scraper, remove all the old packing (FIPG) material from the gasket surfaces and sealing grooves.
- Thoroughly clean all components to remove all the loose material.

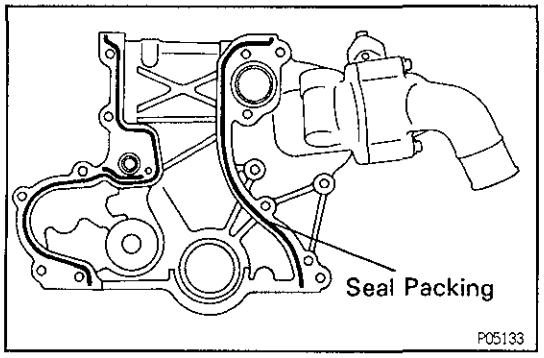

- Using a non–residue solvent, clean both sealing surfaces.

(b) Apply seal packing to the oil pump as shown in the illustration.

Seal packing:

Part No. 08826–00080 or equivalent

- Install a nozzle that has been cut to a 2 – 3 mm (0.08 – 0.12 in.) opening.

HINT: Avoid applying an excessive amount to the surface.

- Parts must be assembled within 5 minutes of application. Otherwise the material must be removed and reapplied.
- Immediately remove nozzle from the tube and reinstall cap.

EG

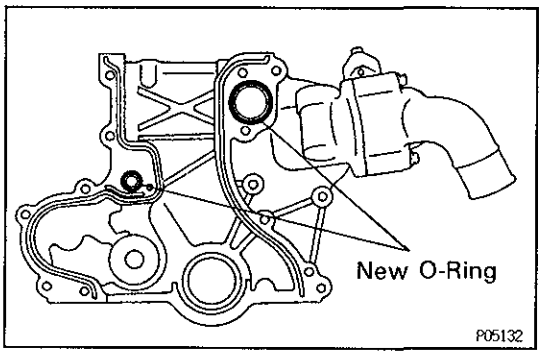

(c) Place two new O–ring in position on the oil pump.

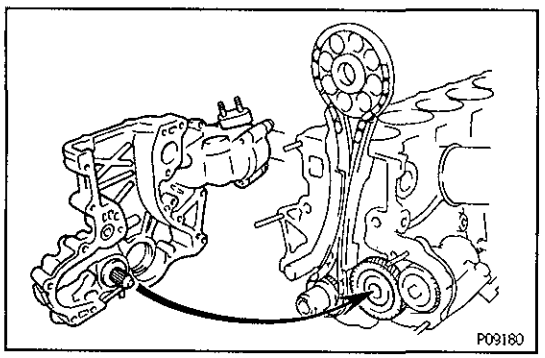

(d) Engage the gear of the oil pump drive rotor with the gear of the oil pump drive gear, and slide the oil pump.

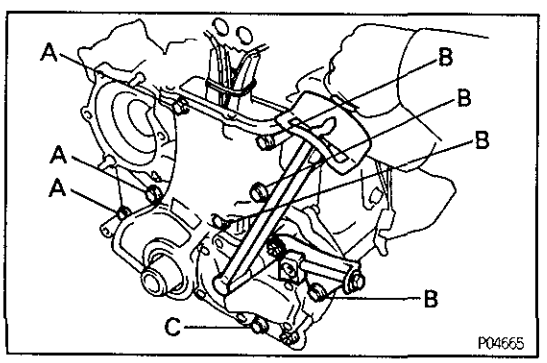

(e) Install the oil pump and drive belt adjusting bar with the nine bolts and two nuts.

Torque: 21 N·m (210 kgf·cm, 15 ft·lbf)

HINT: Each bolt length is indicated in the illustration.

A 30 mm (1.18 in.)
B 50 mm (1.97 in.)
C 60 mm (2.38 in.)

(f) Remove the cord from the chain.

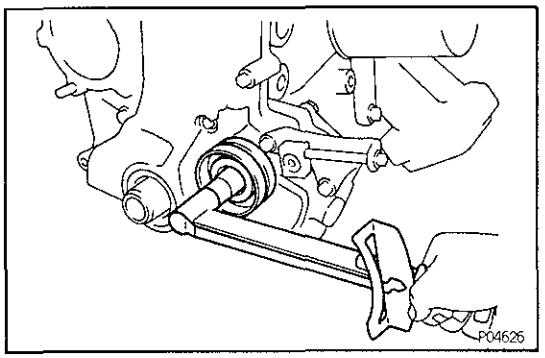

EG

4. INSTALL DRIVE BELT IDLER PULLEY

Install the pulley with the bolt.

Torque: 43 N·m (440 kgf·cm, 32 ft·lbf)

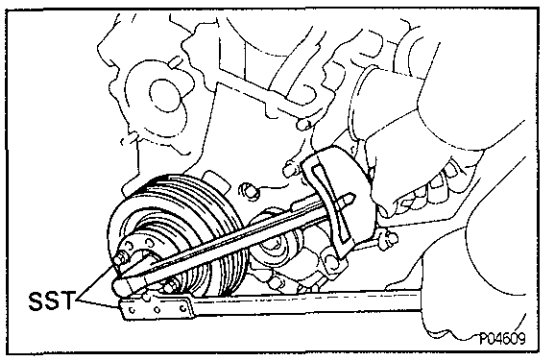

5. INSTALL CRANKSHAFT PULLEY

(a) Align the pulley set key with the key groove of the pulley, and slide on the pulley.

(b) Using SST, install and torque the pulley bolt.
SST 09213–58012, 09330–00021

Torque: 412 N·m (4,200 kgf·cm, 304 ft·lbf)

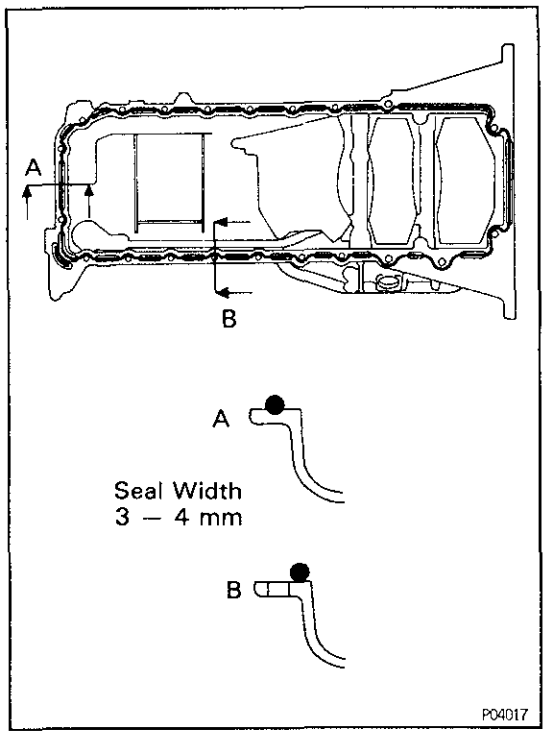

6. INSTALL NO.1 OIL PAN

(a) Remove any old packing (FIPG) material and be careful not to drop any oil on the contact surfaces of the oil pan, oil pump and cylinder block.

- Using a razor blade and gasket scraper, remove all the old packing (FIPG) material from the gasket surfaces and sealing grooves.
- Thoroughly clean all components to remove all the loose material.
- Using a non–residue solvent, clean both sealing surfaces.

(b) Apply seal packing to the No.1 oil pan as shown in the illustration.

Seal packing:

Part No. 08826–00080 or equivalent

- Install a nozzle that has been cut to a 3 – 4 mm (0.12 – 0.16 in.) opening.

HINT: Avoid applying an excessive amount to the surface.

- Parts must be assembled within 5 minutes of application. Otherwise the material must be removed and reapplied.
- Immediately remove nozzle from the tube and reinstall cap.

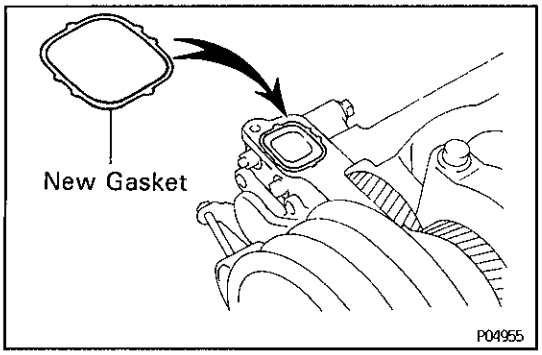

(c) Install a new gasket in position.

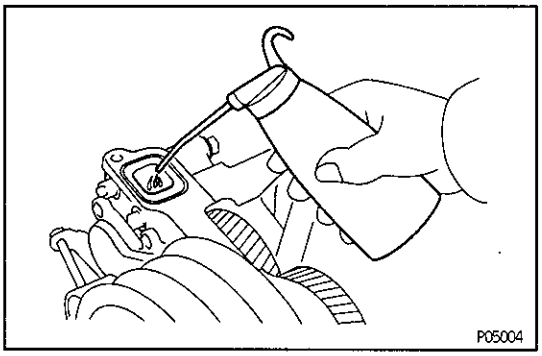

(d) Pour in approximately 15 cm^3 (0.9 cu in.) of engine oil in position.

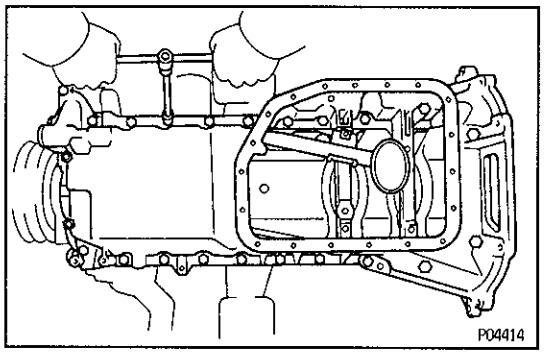

(e) Install the No.1 oil pan with the 21 bolts and two nuts.
14 mm head
Torque: 43 N·m (440 kgf·cm, 32 ft·lbf)
12 mm head
Torque: 20 N·m (200 kgf·cm, 14 ft·lbf)

7. INSTALL NO.2 OIL PAN

(a) Remove any old packing (FIPG) material and be careful not to drop any oil on the contact surface of the No.1 oil pan.
- Using a razor blade and gasket scraper, remove all the old packing (FIPG) material from the gasket surfaces and sealing grooves.
- Thoroughly clean all components to remove all the loose material.
- Using a non–residue solvent, clean both sealing surfaces.

(b) Apply seal packing to the No.2 oil pan as shown in the illustration.
NOTICE: Do not use a solvent which will affect the painted surfaces.
Seal packing:
Part No. 08826–00080 or equivalent

EG

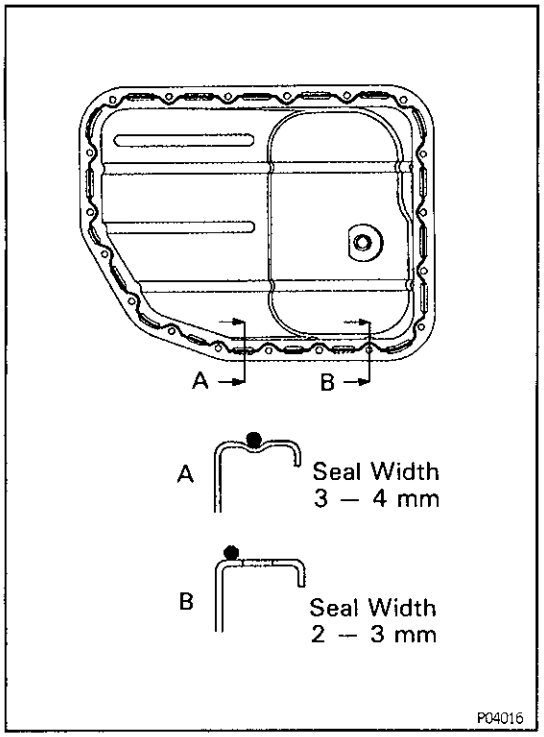

- Install a nozzle that has been cut to a 2 – 3 mm (0.08 – 0.12 in.) opening or 3 – 4 mm (0.012 – 0.016 in.) opening.

HINT: Avoid applying an excessive amount to the surface.

- Parts must be assembled within 5 minutes of application. Otherwise the material must be removed and reapplied.
- Immediately remove nozzle from the tube and reinstall cap.

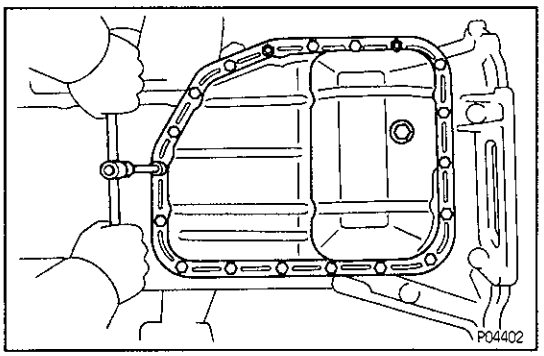

(c) Install the No.2 oil pan with the 17 bolts and two nuts.
Torque: 7.8 N·m (80 kgf·cm, 69 in.·lbf) for Bolt
Torque: 8.8 N·m (90 kgf·cm, 78 in.·lbf) for Nut

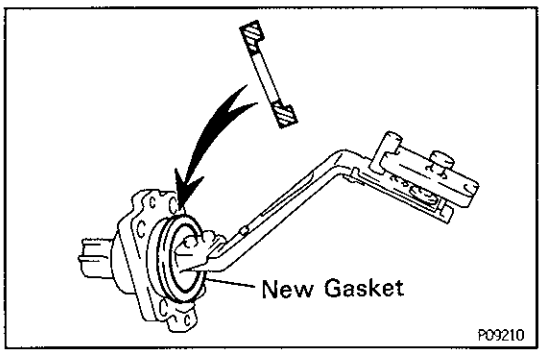

8. (Europe)
INSTALL OIL LEVEL SENSOR

(a) Install a new gasket to the level sensor.

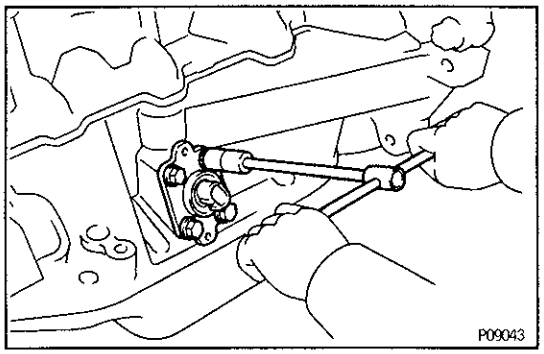

(b) Install the level sensor with the four bolts.
Torque: 5.4 N·m (55 kgf·cm, 48 in.·lbf)

9. **INSTALL CYLINDER HEAD**
(See page EG–70 or 106)

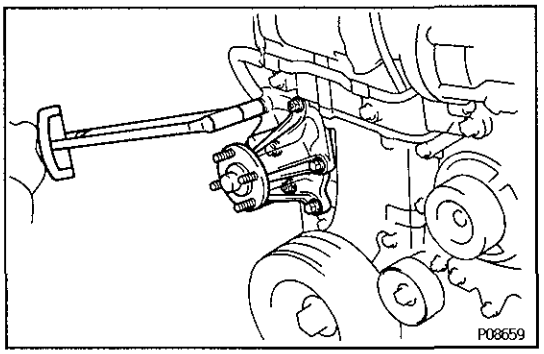

10. **INSTALL WATER PUMP**
Install a new gasket and water pump with the four bolts and two nuts.
Torque: 21 N·m (210 kgf·cm, 15 ft·lbf)