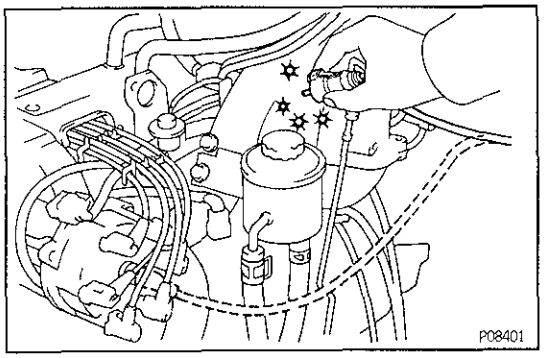

ON–VEHICLE INSPECTION

IG00V-04

SPARK TEST

CHECK THAT SPARK OCCURS

(a) Disconnect the high–tension cords (from the ignition coil) from the distributor cap.

(b) Hold the end approx. 12.5 mm (0.50 in.) from the body ground.

(c) Check if spark occurs while engine is being cranked.
HINT: To prevent gasoline from being injected from injectors during this test, crank the engine for no more than 1 – 2 seconds at a time.
If the spark does not occur, perform the test as follows:

SPARK TEST

NO

CHECK CONNECTION OF IGNITION COIL, IGNITER AND DISTRIBUTOR CONNECTOR → BAD → Connect securely.

OK

CHECK RESISTANCE OF HIGH-TENSION CORD (See page IG-8)
Maximum resistance: 25 kΩ per cord → BAD → Replace the cord(s).

OK

CHECK POWER SUPPLY TO IGNITION COIL AND IGNITER
1. Turn ignition switch to ON.
2. Check that there is battery voltage at ignition coil positive (+) terminal.

→ BAD → Check wiring between ignition switch to ignition coil and igniter.

OK

CHECK RESISTANCE OF IGNITION COIL
(See page IG-12)

Resistance:	(Cold)	(Hot)
Primary	0.36 – 0.55 Ω	0.45 – 0.65 Ω
Secondary	9.0 – 15.4 kΩ	11.4 – 18.1 kΩ

→ BAD → Replace the ignition coil.

OK

CHECK RESISTANCE OF SIGNAL GENERATOR (PICKUP COIL)
(See page IG-14)

Resistance:	(Cold)	(Hot)
G1 and G⊖	185 – 275 Ω	240 – 325 Ω
G2 and G⊖	185 – 275 Ω	240 – 325 Ω
NE and G⊖	185 – 275 Ω	240 – 325 Ω

→ BAD → Replace the distributor housing assembly.

OK

CHECK AIR GAP OF DISTRIBUTOR
(See page IG-13)
Air gap: 0.2 – 0.4 mm (0.008 – 0.016 in.) → BAD → Replace the distributor housing assembly.

OK

CHECK IGT SIGNAL FROM ECU
(See page EG-213) → BAD → Check wiring between ECU, distributor and igniter, and then try another ECU.

OK

TRY ANOTHER IGNITER

V01730

IG073–01

HIGH–TENSION CORDS INSPECTION

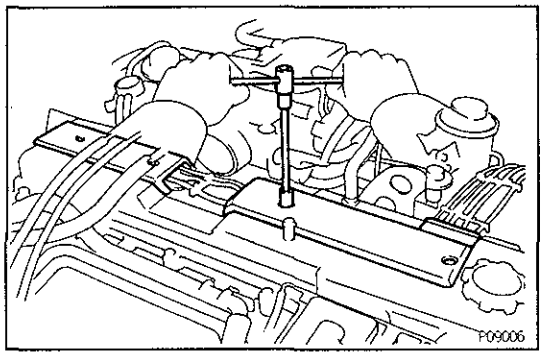

1. REMOVE NO.2 AND NO.3 CYLINDER HEAD COVERS

Remove the four bolts and head covers.

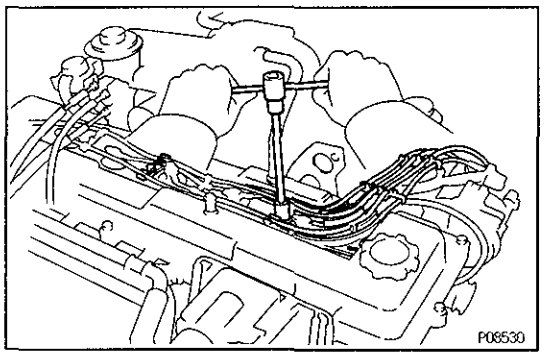

2. DISCONNECT HIGH–TENSION CORDS FROM SPARK PLUGS

(a) Remove the two mounting bolts of the No.1 and No.2 cord clamps.

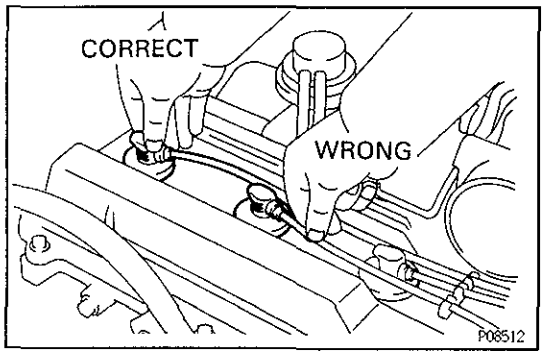

(b) Disconnect the high – tension cords at the rubber boot.

DO NOT pull on the cords.

NOTICE: Pulling on or bending the cords may damage the conductor inside.

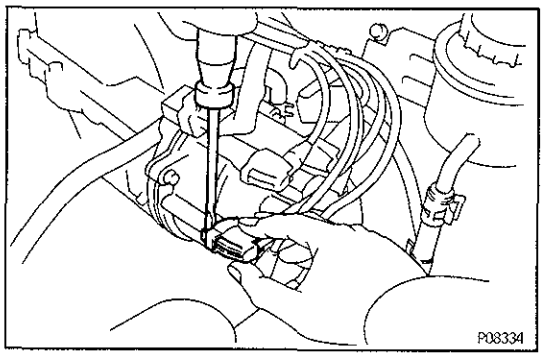

3. DISCONNECT HIGH–TENSION CORDS FROM DISTRIBUTOR CAP AND IGNITION COIL

(a) Using a screwdriver, lift up the lock claw and disconnect the holder from the distributor cap (ignition coil).

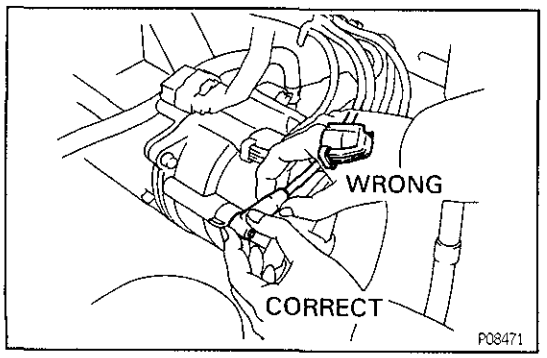

(b) Disconnect the high–tension cord at the grommet.

DO NOT pull on the cord.

NOTICE:

- **Pulling on or bending the cords may damage the conductor inside.**
- **Do not wipe any of the oil from the grommet after the high–tension cord is disconnected.**

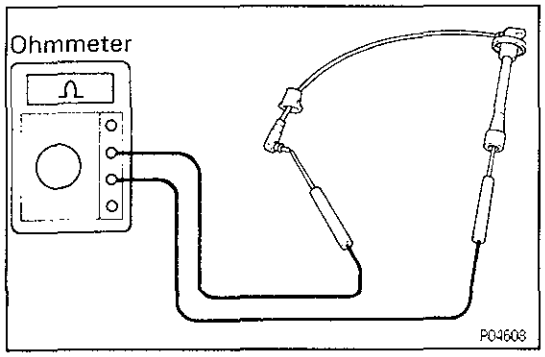

4. INSPECT HIGH–TENSION CORD RESISTANCE

Using an ohmmeter, measure the resistance.

Maximum resistance:

25 kΩ per cord

If the resistance is greater than maximum, check the terminals. If necessary, replace the high – tension cord.

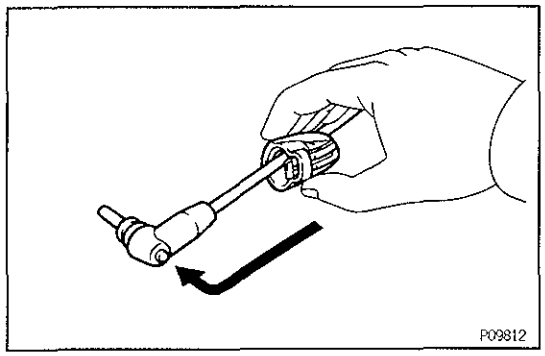

5. RECONNECT HIGH–TENSION CORDS TO DISTRIBUTOR CAP AND IGNITION COIL

(a) Assemble the holder and grommet.

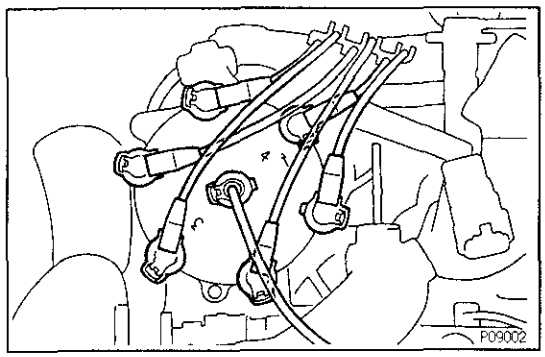

HINT: Connect the high–tension cords to the distributor cap as shown in the illustration.

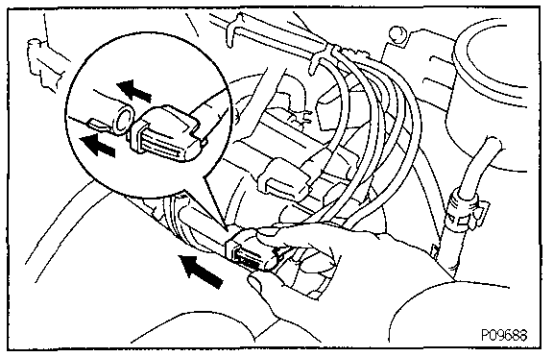

(b) Align the spline of the distributor (ignition coil) with the spline of the holder, and push in the cord.

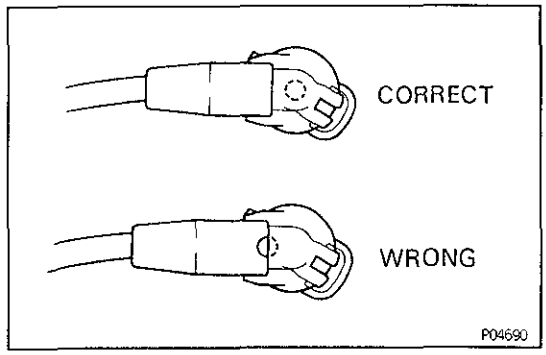

NOTICE: Check that the holder is correctly installed to the grommet and distributor cap as shown in the illustration.

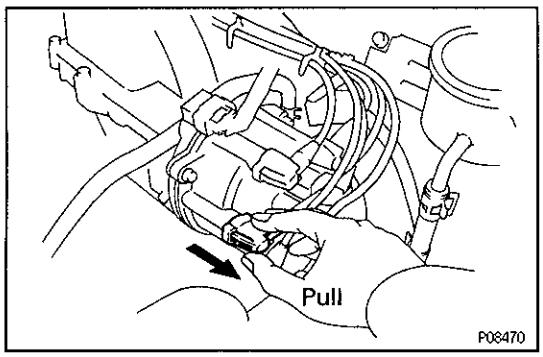

(c) Check that the lock claw of the holder is engaged by lightly pulling the holder.

6. RECONNECT HIGH–TENSION CORDS TO SPARK PLUGS

(a) Secure the high–tension cords with the clamps see the illustration on the next page.

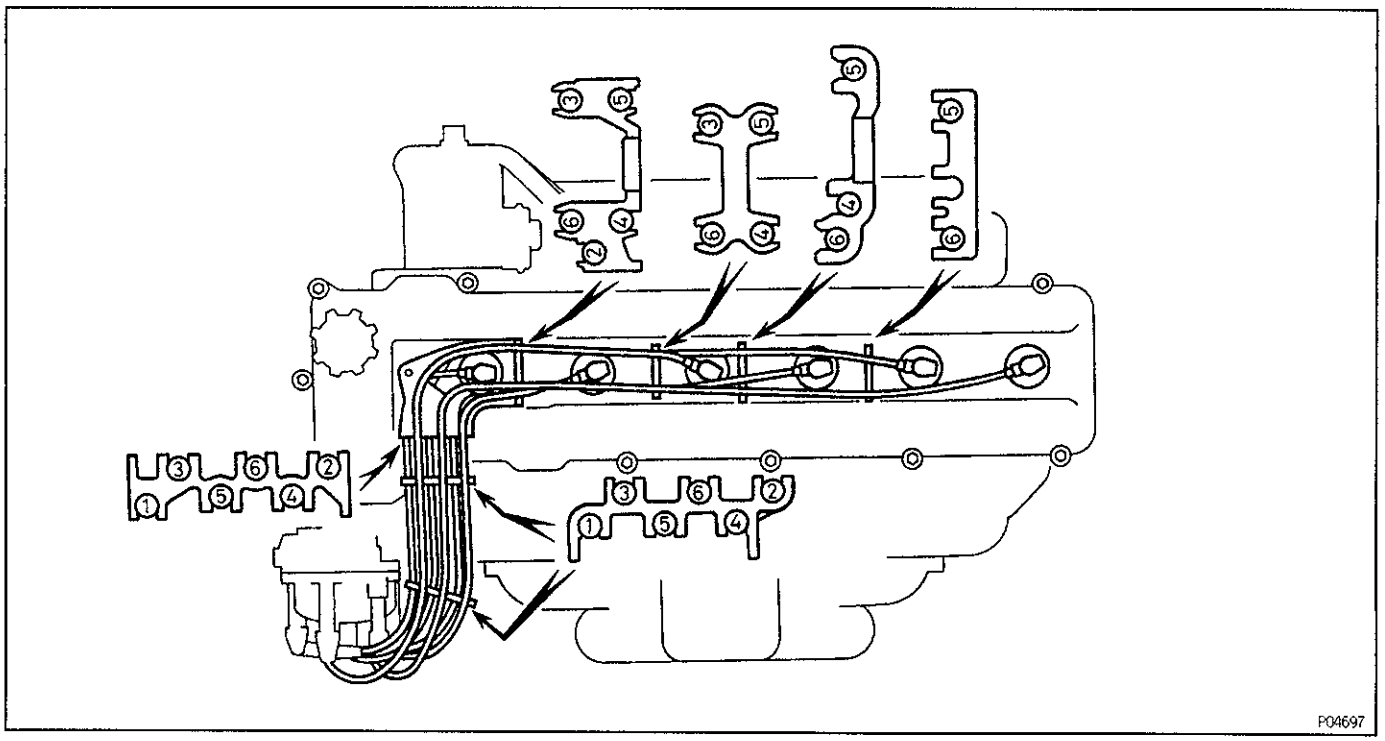

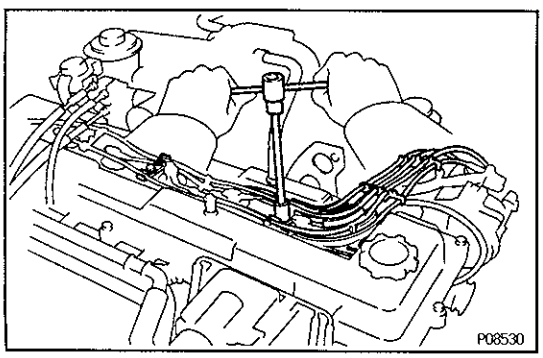

(b) Install the No.1 and No.2 cord clamps with the two bolts.

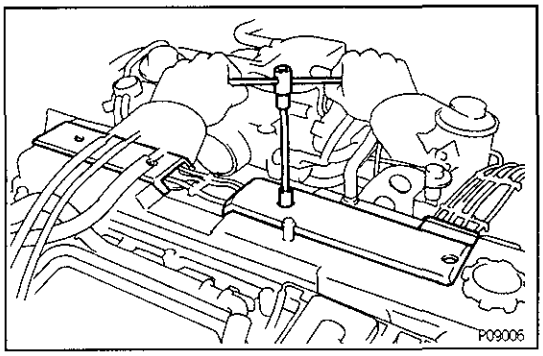

7. INSTALL NO.2 AND NO.3 CYLINDER HEAD COVERS

Install the head covers with the four bolts.

IG

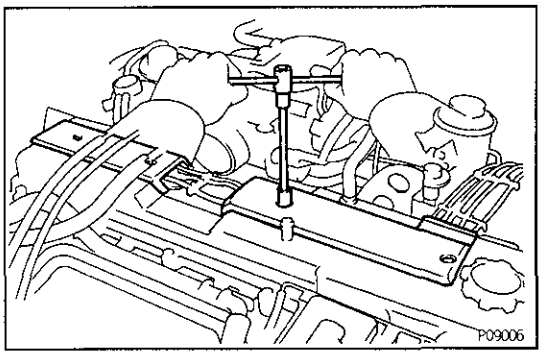

SPARK PLUGS INSPECTION

IG074–01

1. REMOVE NO.2 AND NO.3 CYLINDER HEAD COVERS

Remove the four bolts and head covers.

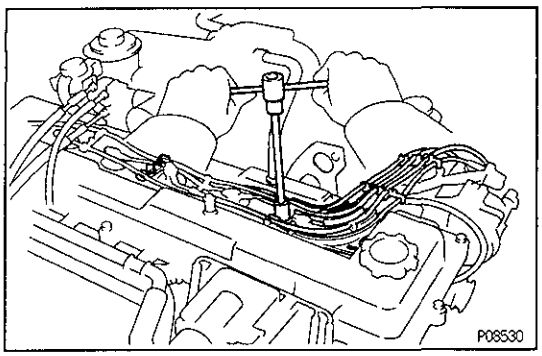

2. DISCONNECT HIGH–TENSION CORDS FROM SPARK PLUGS

(a) Remove the two mounting bolts of the No.1 and No.2 cord clamps.

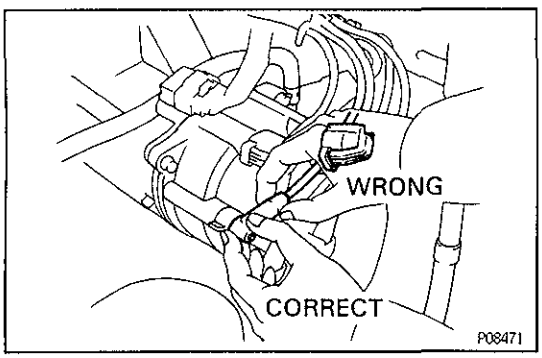

(b) Disconnect the high – tension cords at the rubber boot.

DO NOT pull on the cords.

NOTICE: Pulling on or bending the cords may damage the conductor inside.

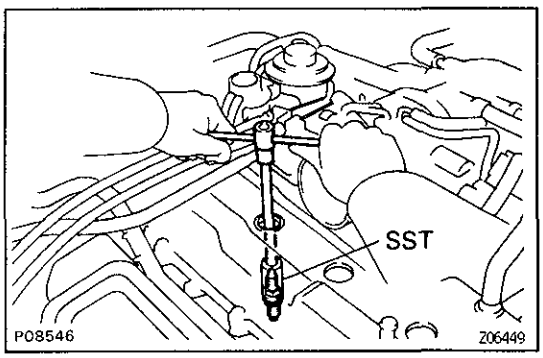

3. REMOVE SPARK PLUGS

Using a 16 mm plug wrench, remove the spark plug.

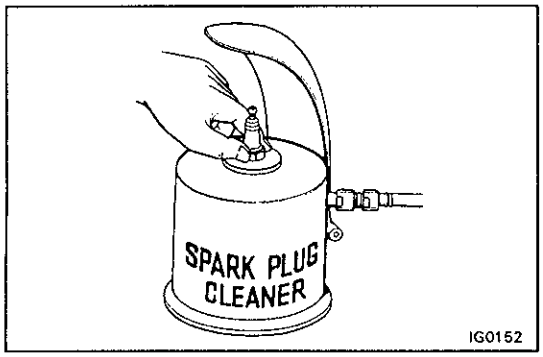

4. CLEAN SPARK PLUGS

Using a spark plug cleaner or wire brush, clean the spark plug.

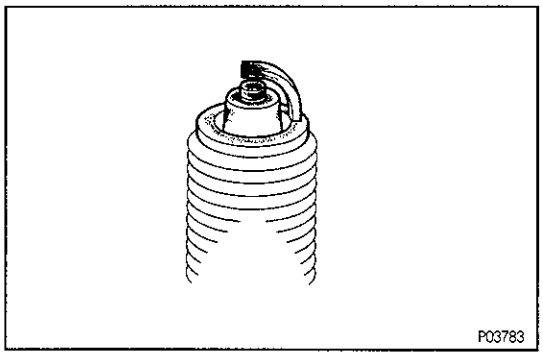

5. VISUALLY INSPECT SPARK PLUGS

Check the spark plug for electrode wear, threads damage and insulator damage.

If abnormal, replace the plugs.

Recommended spark plugs:

ND K16R–U

NGK BKR5EYA

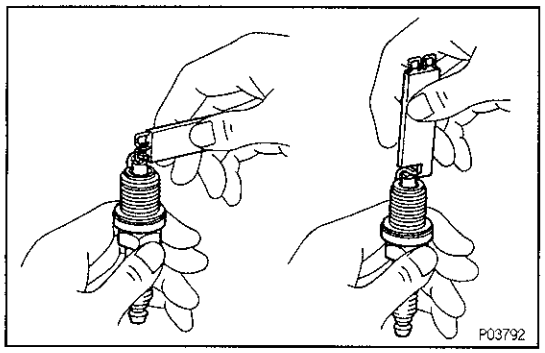

6. ADJUST ELECTRODE GAP

Carefully bend the outer electrode to obtain the correct electrode gap.

Correct electrode gap:

0.8 mm (0.031 in.)

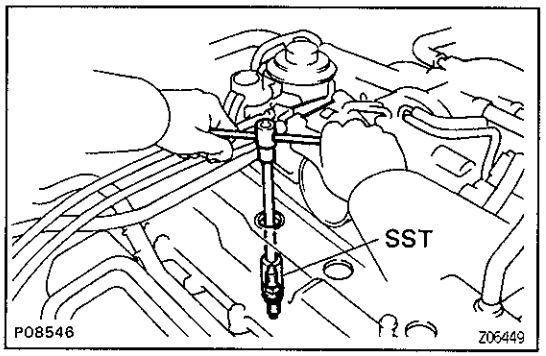

7. INSTALL SPARK PLUGS

Using a 16 mm plug wrench, install the spark plug.

Torque: 20 N·m (200 kgf·cm, 14 ft·lbf)

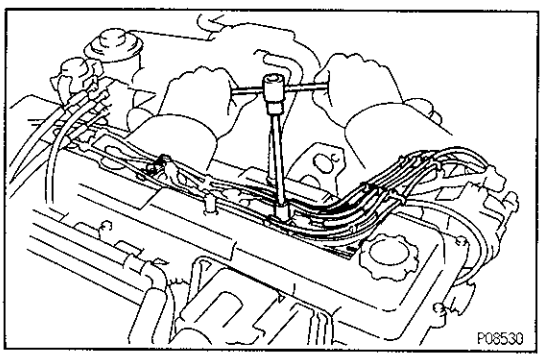

8. RECONNECT HIGH–TENSION CORDS TO SPARK PLUGS

(a) Reconnect the high–tension cords to the spark plugs.

(b) Install the No.1 and No.2 cord clamps with the two bolts.

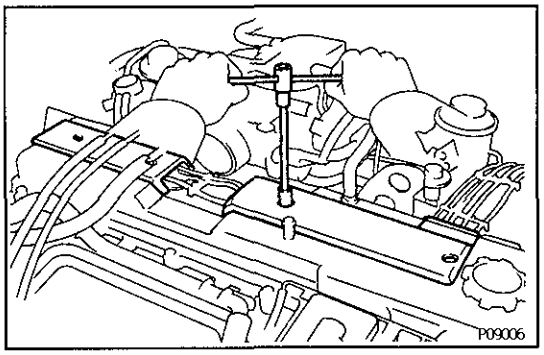

9. **INSTALL NO.2 AND NO.3 CYLINDER HEAD COVERS**
Install the head covers with the four bolts.

IG

IG036–02

IGNITION COIL INSPECTION

NOTICE: "Cold" and "Hot" in the following sentences express the temperature of the coils themselves. "Cold" is from –10°C (14°F) to 50°C (122°F) and "Hot" is from 50°C (122°F) to 100°C (212°F).

1. **DISCONNECT IGNITION COIL CONNECTOR**
2. **DISCONNECT HIGH–TENSION CORD**

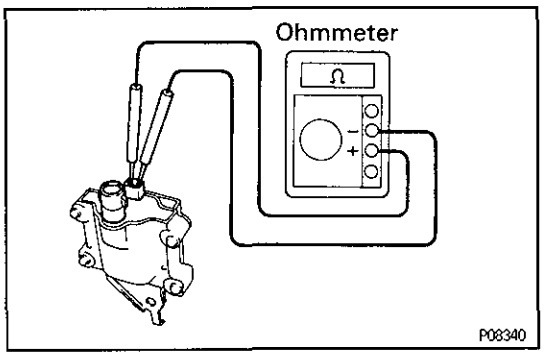

3. **INSPECT PRIMARY COIL RESISTANCE**
Using an ohmmeter, measure the resistance between the positive (+) and negative (–) terminals.
Primary coil resistance (Cold):
0.36 – 0.55 Ω
Primary coil resistance (Hot):
0.45 – 0.65 Ω
If the resistance is not as specified, replace the ignition coil.

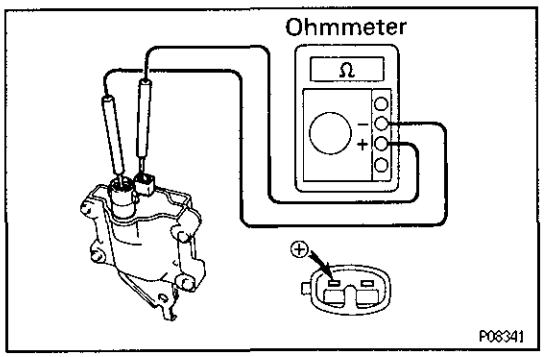

4. **INSPECT SECONDARY COIL RESISTANCE**
Using an ohmmeter, measure the resistance between the positive (+) and high–tension terminals.
Secondary coil resistance (Cold):
9.0 – 15.4 kΩ
Secondary coil resistance (Hot):
11.4 – 18.1 kΩ
If the resistance is not as specified, replace the ignition coil.

5. **RECONNECT HIGH–TENSION CORD**
6. **RECONNECT IGNITION COIL CONNECTOR**

IG05J–02

DISTRIBUTOR INSPECTION

NOTICE: "Cold" and "Hot" in the following sentences express the temperature of the coils themselves. "Cold" is from –10°C (14°F) to 50°C (122°F) and "Hot" is from 50°C (122°F) to 100°C (212°F).

1. DISCONNECT DISTRIBUTOR CONNECTOR

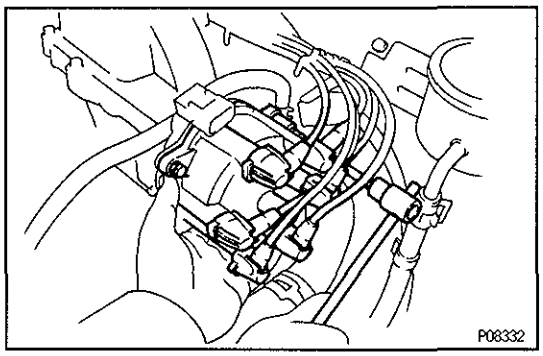

2. REMOVE DISTRIBUTOR CAP WITHOUT DISCONNECTING HIGH–TENSION CORDS

3. REMOVE ROTOR

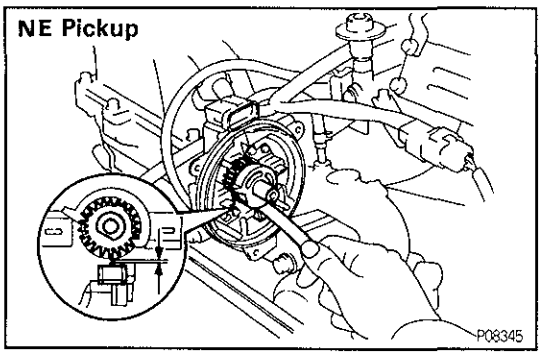

4. INSPECT AIR GAPS

Using a thickness gauge, measure the gap between the signal rotor and the pickup coil projection.

Air gap:

0.2 – 0.4 mm (0.008 – 0.016 in.)

If the gap is not as specified, replace the distributor housing.

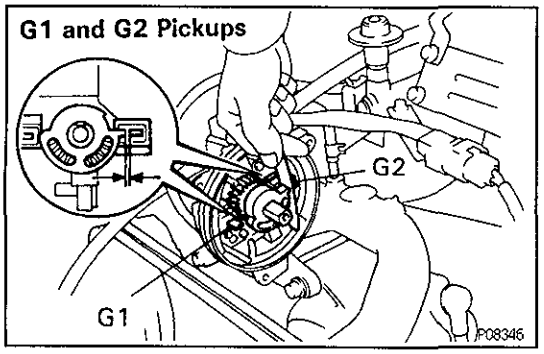

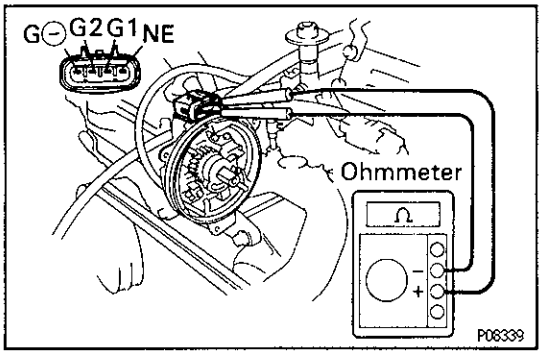

IG

5. **INSPECT SIGNAL GENERATOR (PICKUP COIL) RESISTANCE**

Using an ohmmeter, check that the resistance of the pickup coil.

Pickup coil resistance (Cold):

G1 and G⊖

185 – 275 Ω

G2 and G⊖

185 – 275 Ω

NE and G⊖

185 – 275 Ω

Pickup coil resistance (Hot):

G1 and G⊖

240 – 325 Ω

G2 and G⊖

240 – 325 Ω

NE and G⊖

240 – 325 Ω

If the resistance is not as specified, replace the distributor housing.

6. **REINSTALL ROTOR**

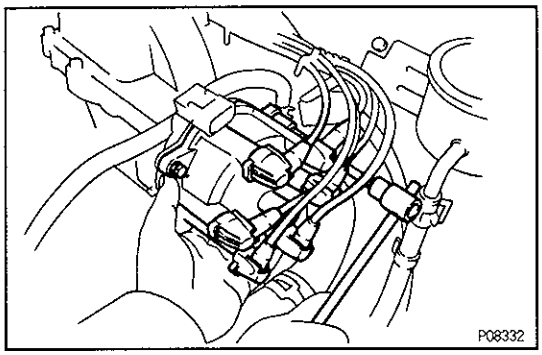

7. **REINSTALL DISTRIBUTOR CAP**
8. **RECONNECT DISTRIBUTOR CONNECTOR**

IG00Z–03

IGNITER INSPECTION

(See procedure Spark Test on page IG–6)