DISTRIBUTOR

1G039–02

COMPONENTS FOR REMOVAL AND INSTALLATION

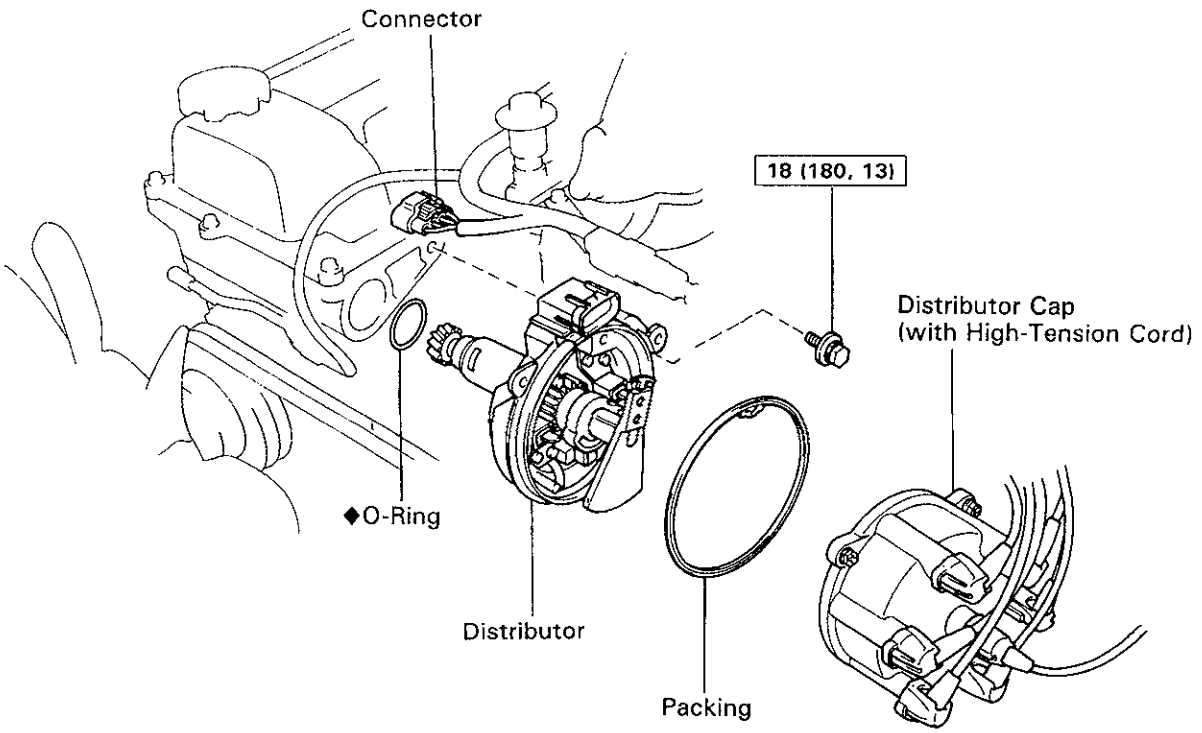

N·m (kgf·cm, ft·lbf) : Specified torque
◆ Non-reusable part

P08349

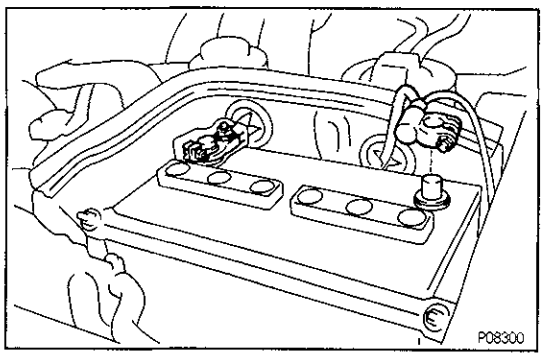

P08300

1G05K–01

DISTRIBUTOR REMOVAL

1. DISCONNECT CABLE FROM NEGATIVE TERMINAL OF BATTERY
2. DISCONNECT DISTRIBUTOR CONNECTOR

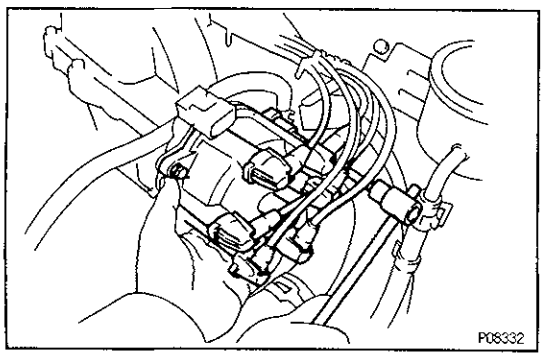

P08332

3. REMOVE DISTRIBUTOR CAP WITHOUT DISCONNECTING HIGH–TENSION CORDS

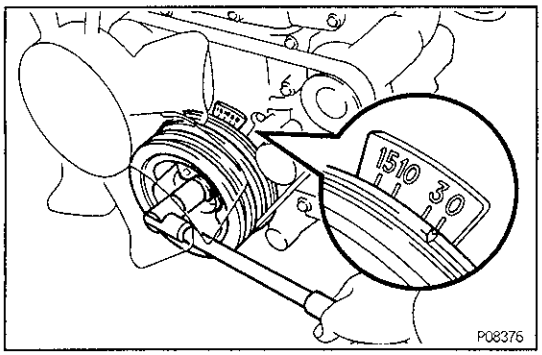

4. SET NO.1 CYLINDER TO TDC/COMPRESSION

(a) Turn the crankshaft pulley until the timing mark is aligned with "0" mark on the timing chain cover.

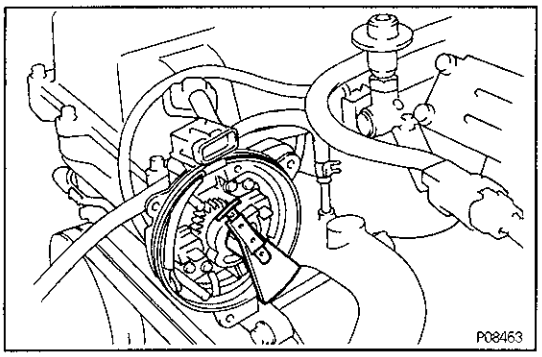

(b) Check that the distributor rotor direction is as shown. If not, turn the crankshaft pulley one complete revolution.

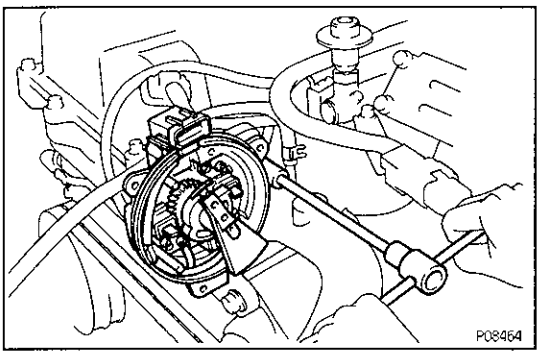

5. REMOVE DISTRIBUTOR

(a) Remove the hold–down bolt and pull out the distributor.

(b) Remove the O–ring from the distributor housing.

IG05L–01

DISTRIBUTOR INSTALLATION

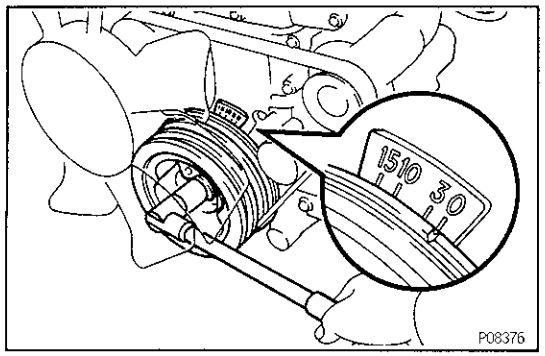

P08376

(See Components for Removal and Installation)

1. CHECK NO.1 CYLINDER TO TDC/COMPRESSION

If nescessary, remove the cylinder head cover, and check the following conditions:

- Turn the crankshaft pulley and align its groove with the timing mark "0" of the timing chain cover.

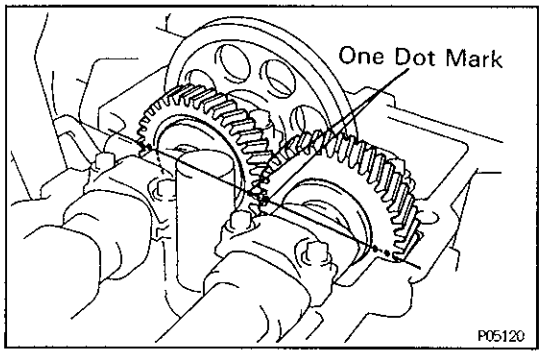

P05120

- Verify taht the timing marks with one and two dots are in straight line on the cylinder head surface as shown in the illustration.

If not, turn the crankshaft one revolution (360°) and align the mark as above.

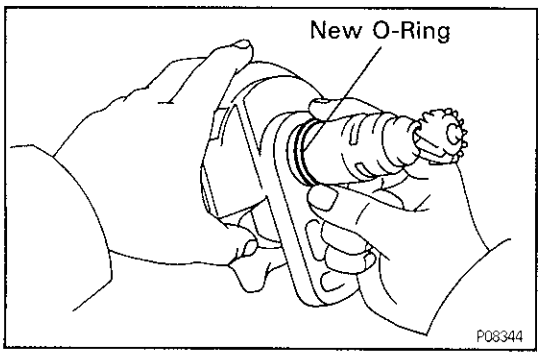

P08344

2. INSTALL DISTRIBUTOR

(a) Install a new O–ring to the distributor.
HINT: Always use a new O–ring when installing the distributor.

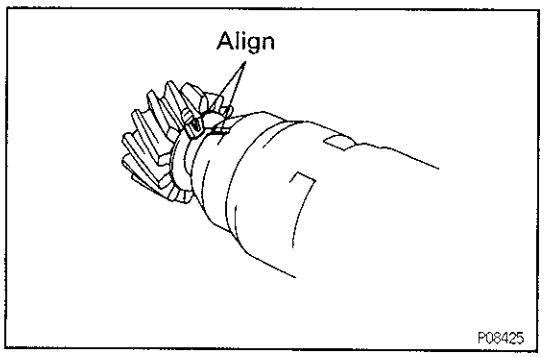

P08425

(b) Align the groove of the distributor housing with the protrusion on the driven gear.
(c) Apply a light coat of engine oil on the O–ring.

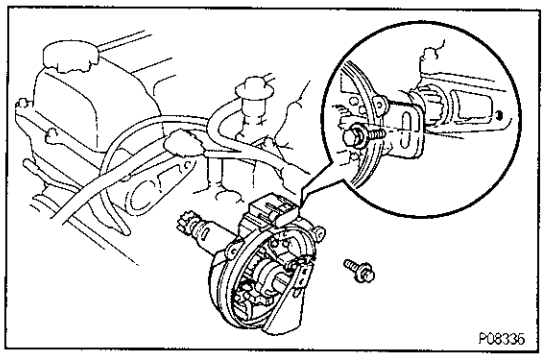
P08336

(d) Insert the distributor, aligning the center of the flange with that of the bolt hole on the cylinder head.
(e) Lightly tighten the hold–down bolt.

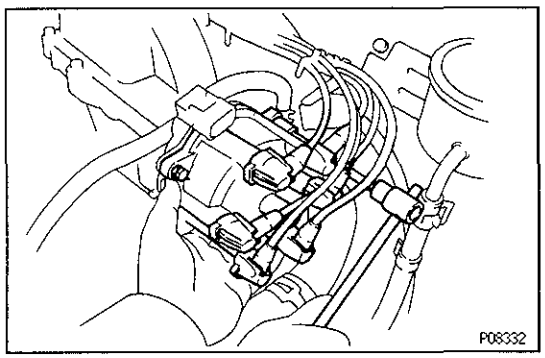

IG

4. INSTALL DISTRIBUTOR CAP

5. CONNECT DISTRIBUTOR CONNECTOR

6. CONNECT CABLE TO NEGATIVE TERMINAL OF BATTERY

7. WARM UP ENGINE

Allow the engine to warm up to normal operating temperature.

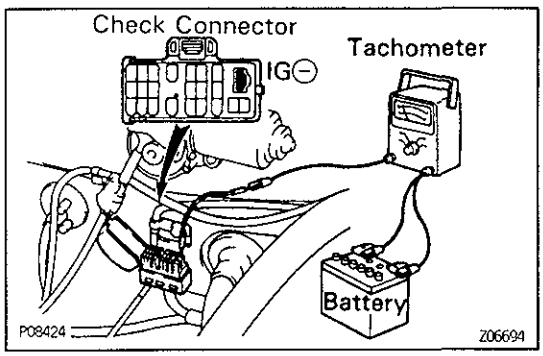

8. CONNECT TACHOMETER AND TIMING LIGHT

Connect the test probe of a tachometer to terminal IG ⊖ of the data link connector 1.

NOTICE:

- **NEVER allow the tachometer terminal to touch ground as it could result in damage to the igniter and/or ignition coil.**
- **As some tachometers are not compatible with this ignition system, we recommend that you confirm the compatibility of your unit before use.**

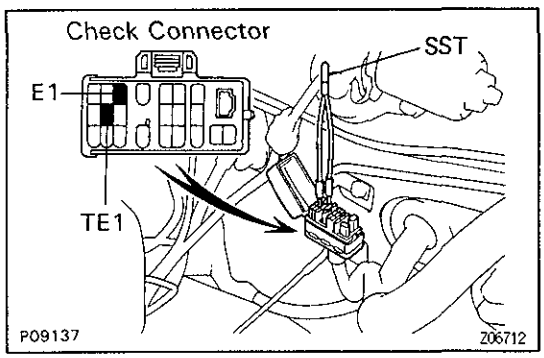

9. ADJUST IGNITION TIMING

(a) Using SST, connect terminals TE1 and E1 of the data link connector 1.
SST 09843–18020

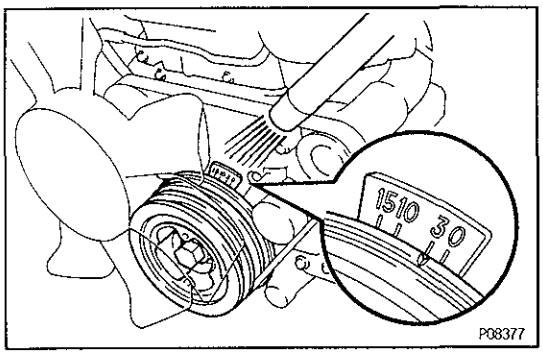

(b) Using a timing light, check the ignition timing.
Ignition timing:
3° BTDC @ idle
(Transmission in neutral position and A/C OFF)

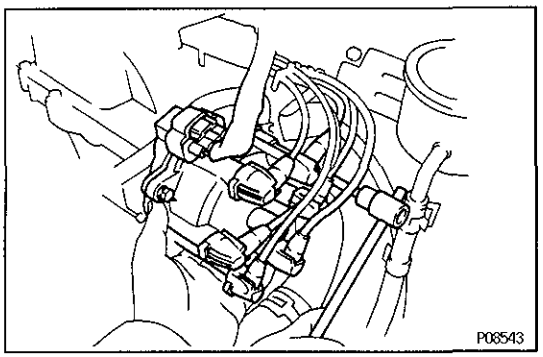

(c) Loosen the hold–down bolt, and adjust by turning the distributor.

(d) Tighten the hold–down bolt, and recheck the ignition timing.

Torque: 18 N·m (180 kgf·cm, 13 ft·lbf)

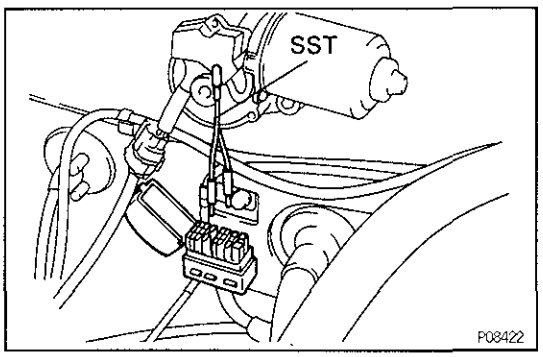

(e) Remove SST from the data link connector 1.
SST 09843–18020

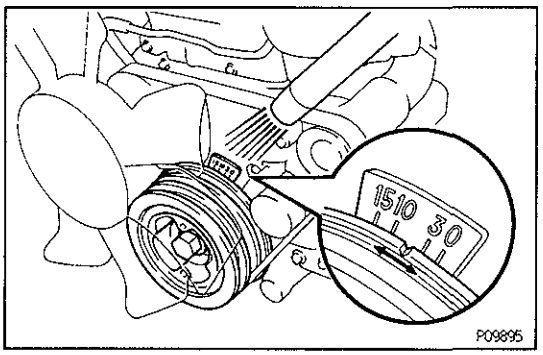

10. FURTHER CHECK IGNITION TIMING

Ignition timing:

2 – 13° BTDC @ idle

(Transmission in neutral position and A/C OFF)

HINT: The timing mark moves in a range between 2° and 13°.

11. DISCONNECT TACHOMETER AND TIMING LIGHT FROM ENGINE