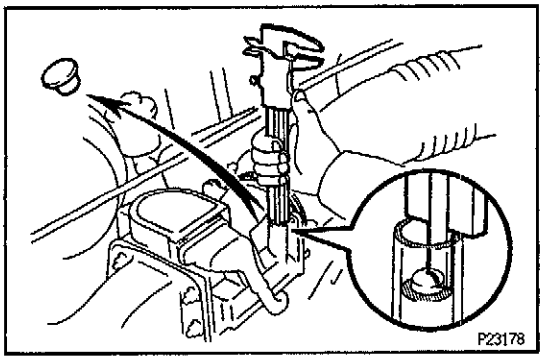

(a) Remove the rubber plug from the air flow meter.
(b) Measure the depth of the idle mixture adjusting screw with vernier calipers.

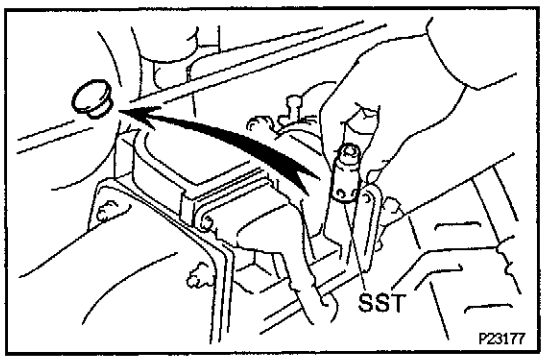

(c) Adjust the depth of the idle mixture adjusting screw by turning the screw with SST.
SST 09243–00020
(d) Reinstall the rubber plug into the hole of the idle mixture adjusting screw.

IDLE CO CHECK AND ADJUST (Station Wagon Except Europe)

EG3R6–01

HINT: This check is used only to determine whether or not the idle CO complies with regulations.

1. INITIAL CONDITIONS

(a) Engine at normal operating temperature
(b) Air cleaner installed
(c) All pipes and hoses of air induction system connected
(d) All accessories switched OFF
(e) All vacuum lines properly connected
(f) EFI system wiring connectors fully plugged
(g) Ignition timing set correctly
(h) Transmission in neutral position
(i) Tachometer and CO meter calibrated by hand

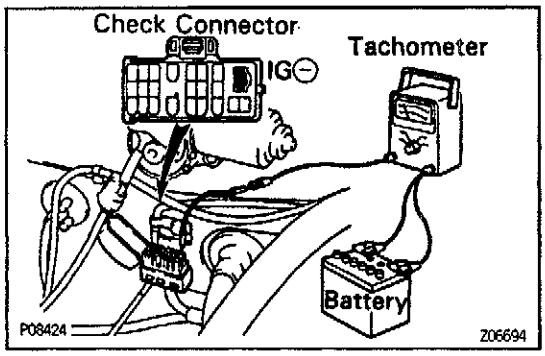

2. CONNECT TACHOMETER TO ENGINE

Connect the test probe of a tachometer to terminal IG ⊖ of the check connector.

NOTICE:

- **NEVER allow the tachometer terminal to touch ground as it could result in damage to the igniter and/or ignition coil.**
- **As some tachometers are not compatible with this ignition system, we recommend that you confirm the compatibility of your unit before use.**

3. CHECK IDLE SPEED

Idle speed:

650 ± 50 rpm

4. **CHECK AND ADJUST CO CONCENTRATION AT IDLE**

NOTICE: Always use a CO meter when adjusting the idle mixture. It is not necessary to adjust with the idle mixture screw in most vehicles if they are in good condition. If a CO meter is not available, DO NOT ATTEMPT TO ADJUST IDLE MIXTURE.

(a) Race the engine at 2,500 rpm for approx. 180 seconds.

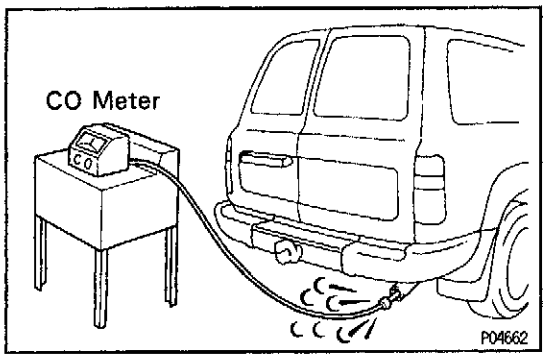

(b) Insert a tester probe at least 40 cm (1.3 ft) into the tailpipe.

(c) Wait at least 1 minute before measuring to allow the concentration to stabilize. Complete the measuring within 3 minutes.

Idle CO concentration:

1.5 ± 0.5 %

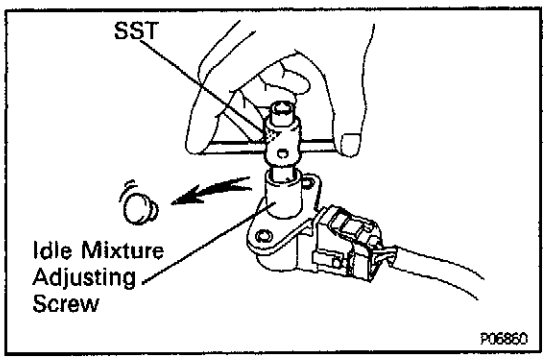

If the CO concentration does not conform to regulations, adjust by turning the IDLE MIXTURE ADJUSTING SCREW in the variable resistor with SST.
SST 09243–00020

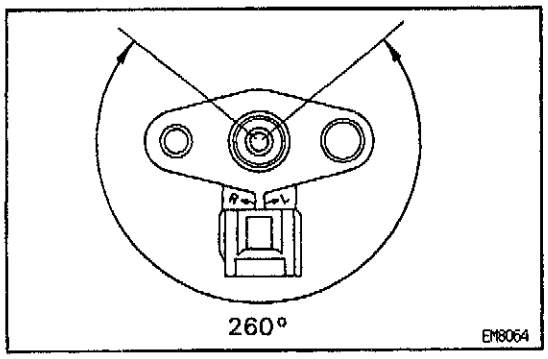

HINT: The idle mixture adjusting screw can be tightened through on angle of 260°.

- If the CO concentration is within specification, this adjustment is complete.
- If the CO concentration cannot be corrected by idle mixture adjustment, see the table below for other possible causes.

Troubleshooting

CO	Phenomenon	Causes
High	Rough idle (Black smoke from exhaust)	1. Clogged air filter 2. Plugged PCV valve 3. Faulty EFI systems: • Faulty pressure regulator • Clogged fuel return line • Defective water temperature sensor • Faulty engine ECU • Faulty injectors • Faulty throttle position sensor • Faulty air flow meter

V06536