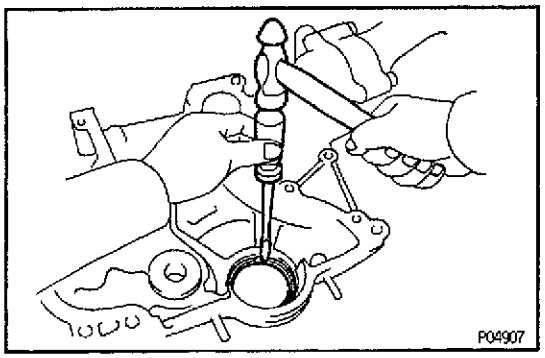

CYLINDER BLOCK

CRANKSHAFT OIL SEALS REPLACEMENT EG0CC-1C

HINT: There are 2 methods (A and B) to replace the oil seal which are as follows:

1. REPLACE CRANKSHAFT FRONT OIL SEAL

A. If timing chain cover is removed from cylinder block:

(a) Using a screwdriver and a hammer, tap out the oil seal.

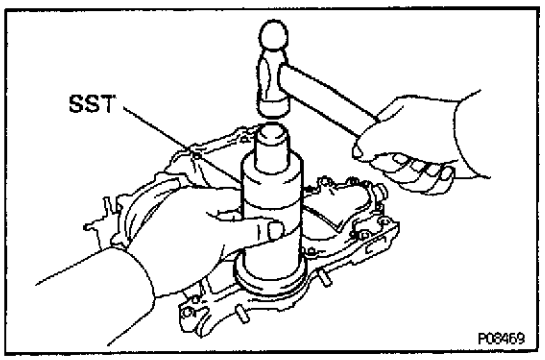

(b) Using SST and a hammer, tap in a new oil seal until its surface is flush with the timing chain cover edge.
SST 09316–60010 (09316–00010, 09316–00050)

(c) Apply MP grease to the oil seal lip.
NOTICE: Do not let foreign matter get onto the lip of the oil seal.

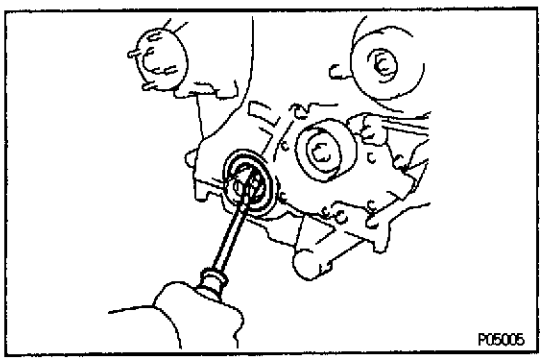

B. If timing chain cover is installed to cylinder block:

(a) Using a screwdriver, pry out the oil seal.
NOTICE: Be careful not to damage the crankshaft. Tape the screwdriver tip.

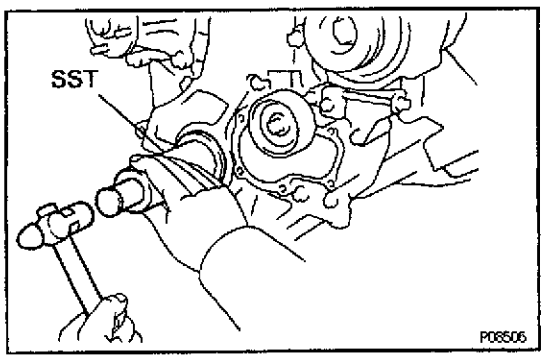

(b) Apply MP grease to a new oil seal lip.
NOTICE: Do not let foreign matter get onto the lip of the oil seal.

(c) Using SST and a hammer, tap in the oil seal until its surface is flush with the timing chain cover edge.
SST 09316–60010 (09316–00010, 09316–00050)

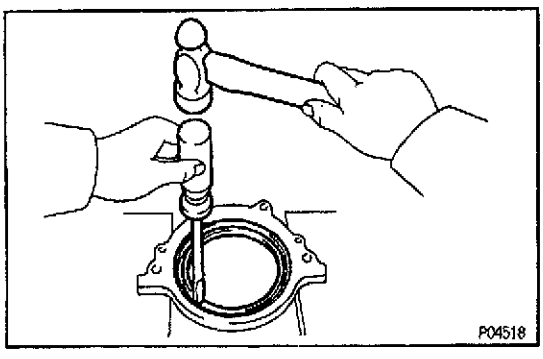

2. REPLACE CRANKSHAFT REAR OIL SEAL

A. If rear oil seal retainer is removed from cylinder block:

(a) Using a screwdriver and a hammer, tap out the oil seal.

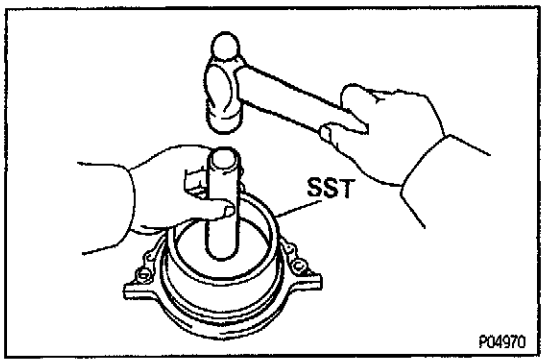

(b) Using SST and a hammer, tap in a new oil seal until its surface is flush with the rear oil seal edge.
SST 09223–15030, 09950–70010 (09951–07150)
NOTICE: Do not let foreign matter get onto the lip of the oil seal.

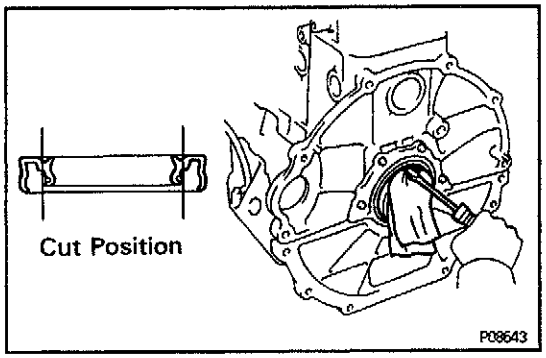

B. If rear oil seal retainer is installed to cylinder block:

(a) Using a knife, cut off the oil seal lip.

(b) Using a screwdriver, pry out the oil seal.
NOTICE: Be careful not to damage the crankshaft. Tape the screwdriver tip.

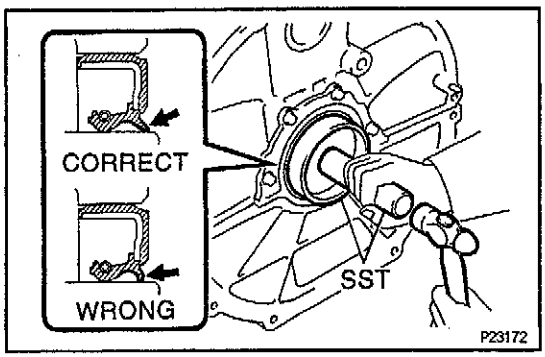

(c) Using SST and a hammer, tap in a new oil seal until its surface is flush with the rear oil seal retainer edge.
SST 09223–15030, 09950–70010 (09951–07150)
NOTICE: Do not let foreign matter get onto the lip of the oil seal.

(d) Check that the lip of the oil seal is not bent inward.