TROUBLESHOOTING w/ VOLT, OHMMETER (Station Wagon)

EG0GB-04

HINT:

- The following troubleshooting procedures are designed for inspection of each separate system, and therefore the actual procedure may vary somewhat. However, troubleshooting should be performed while referring to the inspection methods described in this manual.
- Before beginning inspection, it is best to first make a simple check of the fuses, H–fuses, fusible links and the condition of the connectors.
- The following troubleshooting procedures are based on the supposition that the trouble lies in either a short or open circuit within the computer.
- If engine trouble occurs even though proper operating voltage is detected in the computer connector, then it can be assumed that the ECU is faulty and should be replaced.

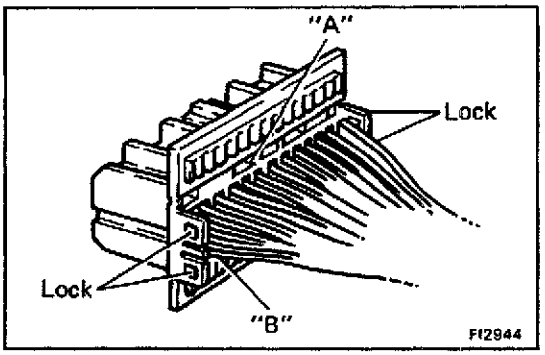

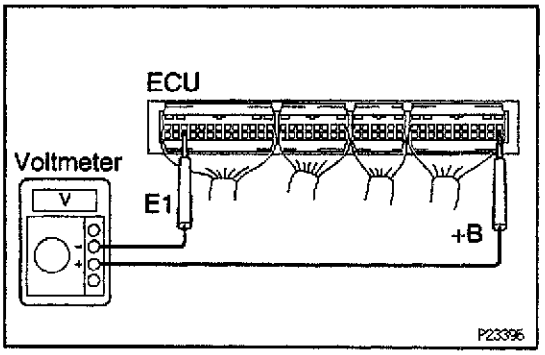

EFI SYSTEM CHECK PROCEDURE

EG0GA-04

PREPARATION

(a) Disconnect the connectors from the ECU.

(b) Remove the locks as shown in the illustration so that the tester probe(s) can easily come in.
NOTICE: Pay attention to sections "A" and "B" in the illustration which can be easily broken.

(c) Reconnect the connectors to the ECU.

(d) Using a voltmeter with high impedance (10 kΩ/V minimum), measure the voltage at each terminal of the wiring connectors.
HINT:
- Perform all voltage measurements with the connectors connected.
- Verify that the battery voltage is 11 V or more when the ignition switch is in "ON" position.

ECU Terminals (Europe)

Symbol	Connection	Symbol	Connection	Symbol	Connection
E01	POWER GROUND	VF	CHECK CONNECTOR	HT1	OXYGEN SENSOR
E02	POWER GROUND	E21	AIR FLOW METER		–
#10	INJECTOR (No.1)	TE1	CHECK CONNECTOR	STA	NEUTRAL START SWITCH
#30	INJECTOR (No.3)	TE2	CHECK CONNECTOR	NSW	IGNITION SWITCH
#20	INJECTOR (No.2)	KNK1	NO.1 KNOCK SENSOR		–
E1	ECU GROUND	KNK2	NO.2 KNOCK SENSOR	TFN*	TRANSFER NEUTRAL POSITION SWITCH
S1*	ECT SOLENOID	OX1	OXYGEN SENSOR	L4*	L4 POSITION SENSOR
IGT	IGNITER		–	PWR*	PATERN SELECT SWITCH
S2*	ECT SOLENOID	THW	WATER TEMP. SENSOR	SPD	NO.1 VEHICLE SPEED SENSOR
EGR	VSV FOR EGR		–	OD2*	O/D MAIN SWITCH
SL*	ECT SOLENOID	THA	AIR FLOW METER	A/C	A/C AMPLIFIE
FPU	VSV FOR FUEL PRESSURE CONTROL	IDL	TP SENSOR	OD1*	CRUISE CONTROL ECU
ISC1	ISC VALVE (No.1 Motor Coil)	VG	AIR FLOW METER		–
	–	VTA	TP SENSOR	L*	NEUTRAL START SWITCH
ISC2	ISC VALVE (No.2 Motor Coil)	VCC	TP SENSOR		–
HI*	HOLD INDICATOR LIGHT	E2	SENSOR GROUND	2*	NEUTRAL START SWITCH
ISC3	ISC VALVE (No.3 Motor Coil)	G–	DISTRIBUTOR	W	"CHECK" ENGINE WARNING LIGHT
	–	NE	DISTRIBUTOR	R*	NEUTRAL START SWITCH
ISC4	ISC VALVE (No.4 Motor Coil)	HOLD*	PATTERN SELECT SWITCH	MRLY	EFI MAIN RELAY (COIL)
IGF	IGNITER	G1	DISTRIBUTOR	STP	STOP LIGHT SWITCH
ST*	ECT SOLENOID		–	BATT	BATTERY B +
DG*	CHECK CONNECTOR	G2	DISTRIBUTOR	FPR	FUEL PUMP RELAY
#40	INJECTOR (No.4)		–	IGSW	IGNITION SWITCH
#60	INJECTOR (No.6)		–	+B	EFI MAIN RELAY
#50	INJECTOR (No.5)	SP2+*	NO.2 VEHICLE SPEED SENSOR	* Only for ECT	
FC	CIRCUIT OPENING RELAY	SP2–*	NO.2 VEHICLE SPEED SENSOR		

ECU Terminals

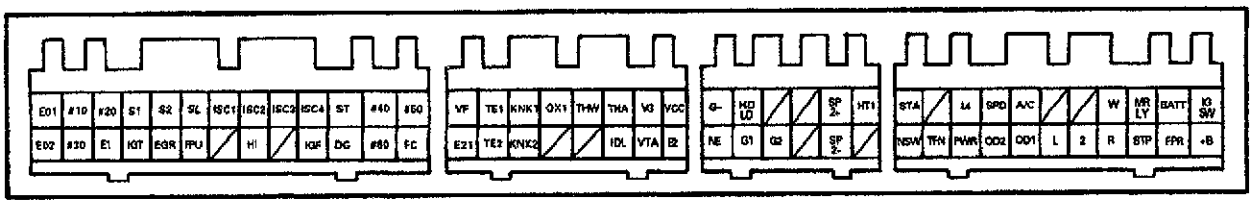

P01399

V06538

ECU Terminals (Except Europe)

Symbol	Connection	Symbol	Connection	Symbol	Connection
E01	POWER GROUND	VF	CHECK CONNECTOR		–
E02	POWER GROUND	E21	AIR FLOW METER	E11	SENSOR GROUND
#10	INJECTOR (No.1)	TE1	CHECK CONNECTOR	STA	NEUTRAL START SWITCH
#30	INJECTOR (No.3)	TE2	CHECK CONNECTOR	NSW	IGNITION SWITCH
#20	INJECTOR (No.2)	KNK1	NO.1 KNOCK SENSOR	STW	SUB TANK WARNING LIGHT
E1	ECU GROUND	KNK2	NO.2 KNOCK SENSOR	TFN*	TRANSFER NEUTRAL POSITION SWITCH
S1*	ECT SOLENOID	VAF	VARIABL RESISTOR	L4*	L4 POSITION SENSOR
IGT	IGNITER	HOLD*	PATERN SELECT SWITCH	PWR*	PATERN SELECT SWITCH
S2*	ECT SOLENOID	THW	WATER TEMP. SENSOR	SPD	VEHICLE SPEED SENSOR
STV	SUB FUEL TANK VALVE		–	OD2*	O/D MAIN SWITCH
SL*	ECT SOLENOID	THA	AIR FLOW METER	A/C	A/C AMPLIFIE
FPU	VSV FOR FUEL PRESSURE CONTROL	IDL	TP SENSOR	OD1*	CRUISE CONTROL ECU
ISC1	ISC VALVE (No.1 Motor Coil)	VG	AIR FLOW METER	MS	FUEL MAIN SWITCH
FP	SUB FUEL TANK PUMP	VTA	TP SENSOR	L*	NEUTRAL START SWITCH
ISC2	ISC VALVE (No.2 Motor Coil)	VCC	TP SENSOR	PI	FUEL MAIN SWITCH
	–	E2	SENSOR GROUND	2*	NEUTRAL START SWITCH
ISC3	ISC VALVE (No.3 Motor Coil)	G–	DISTRIBUTOR	W	"CHECK" ENGINE WARNING LIGHT
HI*	HOLD INDICATOR LIGHT	NE	DISTRIBUTOR	R*	NEUTRAL START SWITCH
ISC4	ISC VALVE (No.4 Motor Coil)	HS1	TOP SWITCH	MRLY	EFI MAIN RELAY (COIL)
IGF	IGNITER	G1	DISTRIBUTOR	STP	STOP LIGHT SWITCH
ST*	ECT SOLENOID	HS2	TOP SWITCH	BATT	BATTERY B +
DG*	CHECK CONNECTOR	G2	DISTRIBUTOR	FPR	FUEL PUMP SWITCH
#40	INJECTOR (No.4)	EMP	SUB FUEL SWITCH	IGSW	IGNITION SWITCH
#60	INJECTOR (No.6)	SD	FUEL SENDER GAUGE	+B	EFI MAIN RELAY
#50	INJECTOR (No.5)	SP2+*	NO.2 VEHICLE SPEED SENSOR	* Only for ECT	
FC	CIRCUIT OPENING RELAY	SP2–*	NO.2 VEHICLE SPEED SENSOR		

ECU Terminals

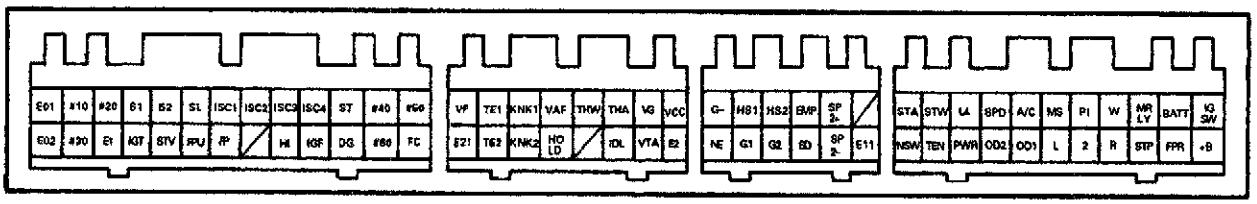

P01399

V06537

EGBM2-01

ECU Wiring Connectors Voltage

No.	Terminals	Condition		STD voltage (V)	See page
1	BATT – E1	–		9 – 14	EG-23
	IG SW – E1	IG SW ON			
	MRLY – E1				
	+B – E1				
2	IDL – E2	IG SW ON	Throttle valve open	9 – 14	EG-26
	VCC – E2		–	4.5 – 5.5	
	VTA – E2		Throttle valve fully closed (Throttle opener must be cancelled first)	0.3 – 0.8	
			Throttle valve fully open	3.2 – 4.9	
3	VG – E21	Idling	N position, A/C switch OFF	1.1 – 1.5	EG-28
4	#10 ~ #60 – E01 E02	IG SW ON		9 – 14	EG-29
5	THA – E2	IG SW ON	Intake air temp. 20°C (68°F)	0.5 – 3.4	EG-30
6	THW – E2		Engine coolant temp. 80°C (176°F)	0.2 – 1.0	EG-31
7	STA – E1	Cranking		6 or more	EG-32
8	IGT – E1	Idling		Pulse generation	EG-33
9	ISC1 ~ ISC4 – E1	IG SW ON		9 – 14	EG-34
10	W – E1	No trouble ("CHECK" engine warning light off) and engine running		9 – 14	EG-35

ECU Terminals

Europe

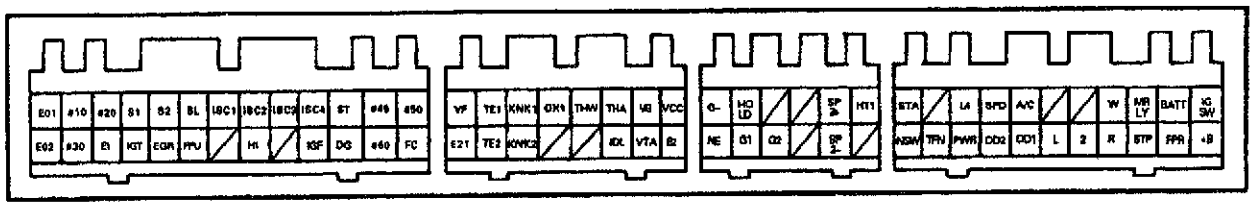

Except Europe

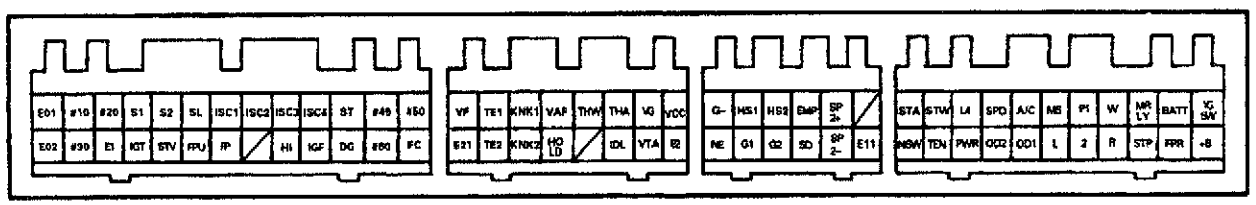

P01399
P01399

V06539

No.	Terminals	Trouble	Condition	STD voltage
1	BATT – E1	No voltage	—	9 – 14 V
	IG SW – E1	No voltage	IG SW ON	9 – 14 V
	MRLY – E1			
	+B – E1			

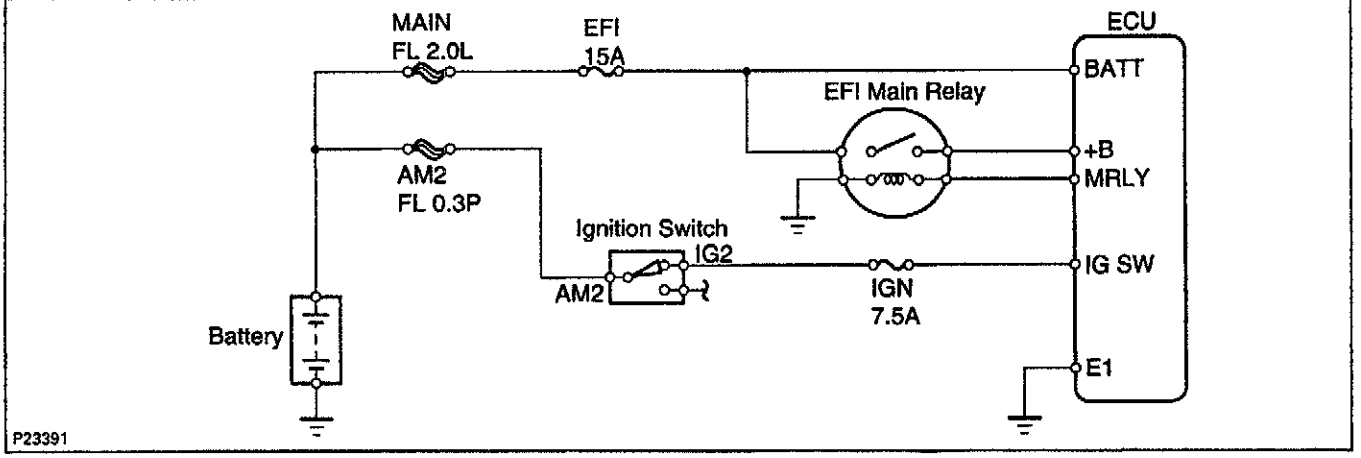

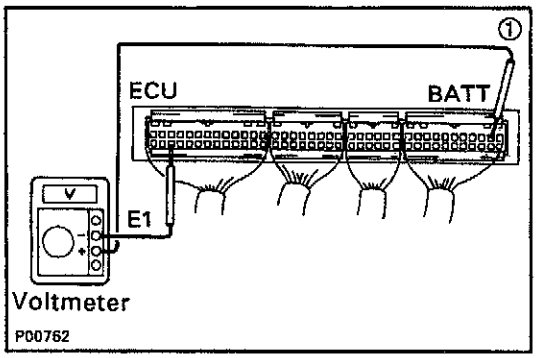

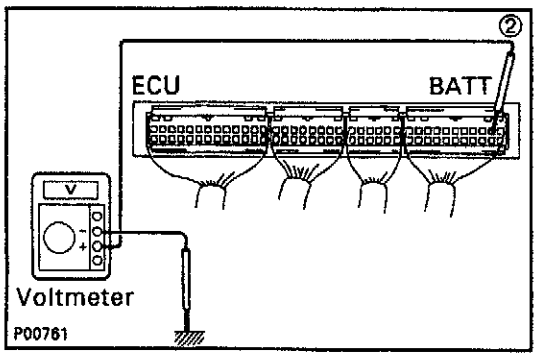

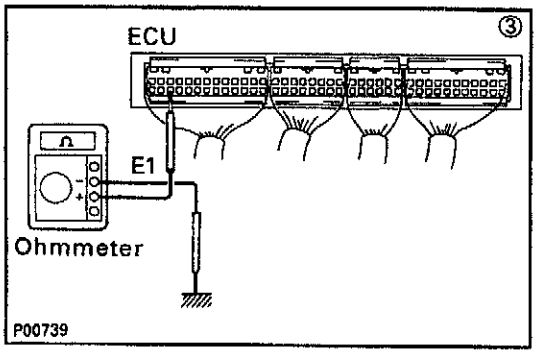

• **BATT – E1**

① There is no voltage between ECU terminals BATT and E1.

② Check that there is voltage between ECU terminal BATT and body ground.

NO → OK

③ Check wiring between ECU terminal E1 and body ground.

OK → Try another ECU.

BAD → Repair or replace.

Check fuse and fusible link. BAD → Replace.

OK

Check wiring between ECU terminal and battery. BAD → Repair or replace.

V06540

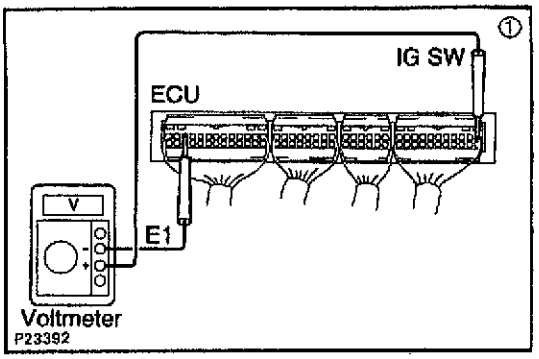

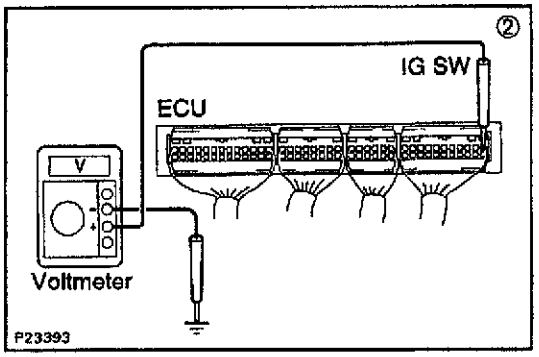

• **IG SW – E1**

① There is no voltage between ECU terminals IG SW and E1. **(IG SW ON)**

↓

② Check that there is voltage between ECU terminal IG SW and body ground. **(IG SW ON)**

NO → ↓

OK → Check wiring between ECU terminal E1 and body ground.

OK → Try another ECU.

BAD → Repair or replace.

↓

Check fuses, fusible link and ignition switch. → BAD → Repair or replace.

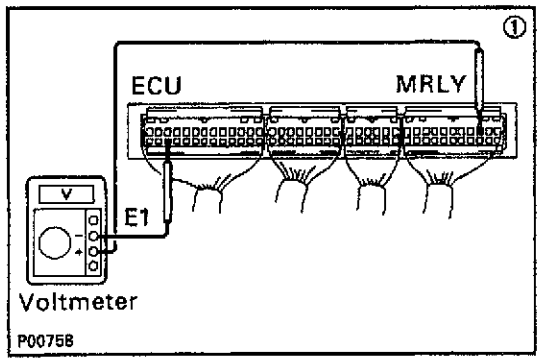

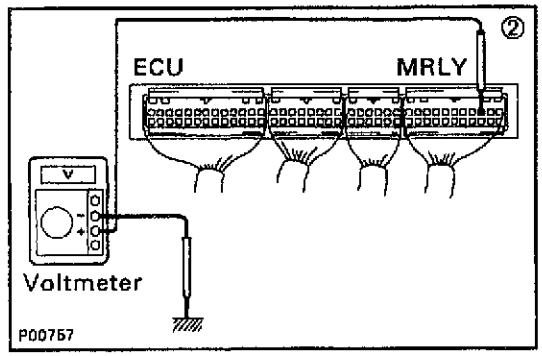

• **MRLY – E1**

① There is no voltage between ECU terminals MRLY and E1. **(IG SW ON)**

↓

② Check that there is voltage between ECU terminal MRLY and body ground. **(IG SW ON)**

NO → ↓

OK → Check wiring between ECU terminal E1 and body ground.

OK → Try another ECU.

BAD → Repair or replace.

↓

Check EFI main relay and wiring harness. → BAD → Replace.

↓ OK

Try another ECU.

V06541

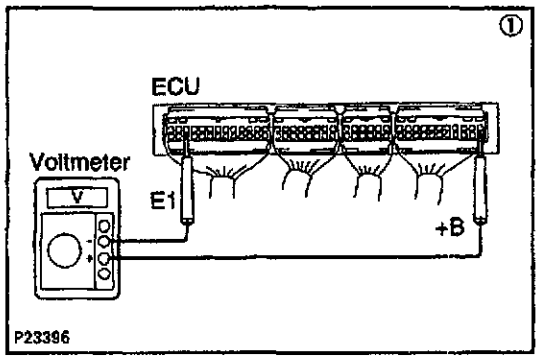

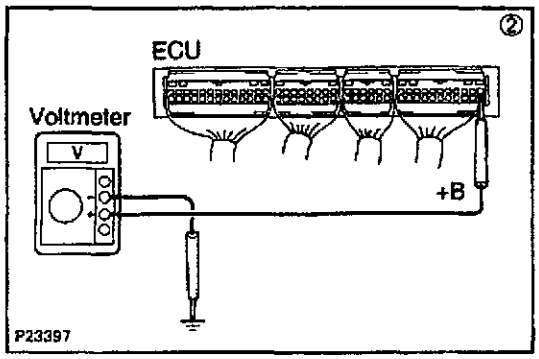

• +B – E1

① There is no voltage between ECU terminals +B and E1. **(IG SW ON)**

② Check that there is voltage between ECU terminal +B and body ground. **(IG SW ON)**

NO → Check fuse, fusible link and wiring harness. BAD → Repair or replace.

OK → Check wiring between ECU terminal E1 and body ground.

OK → Try another ECU.

BAD → Repair or replace.

Check fuse, fusible link and wiring harness. OK → Check EFI main relay. BAD → Replace.

Check EFI main relay. OK → Refer to MRLY – E1 trouble section.

V06553

No.	Terminals	Trouble	Condition		STD voltage
2	IDL – E2	No voltage	IG SW ON	Throttle valve open	9 – 14 V
	VCC – E2			–	4.5 – 5.5 V
	VTA – E2			Throttle valve fully closed (Throttle opener must be cancelled first)	0.3 – 0.8 V
				Throttle valve fully open	3.2 – 4.9 V

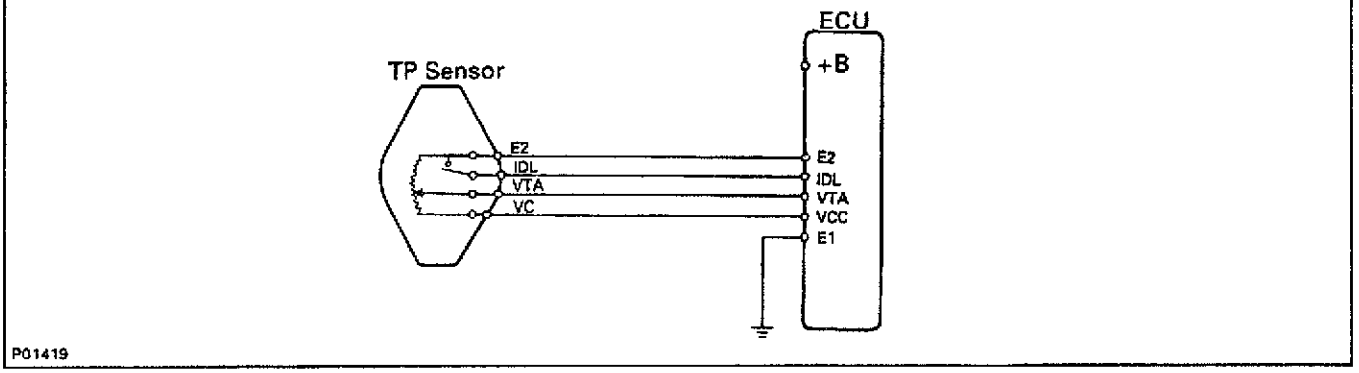

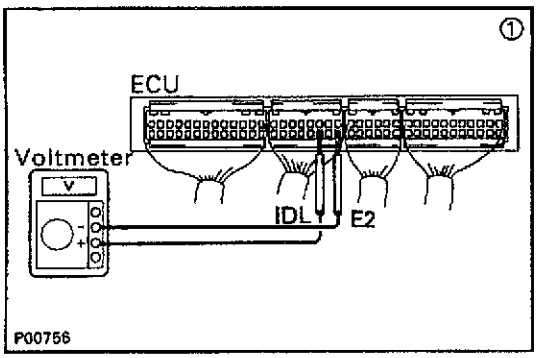

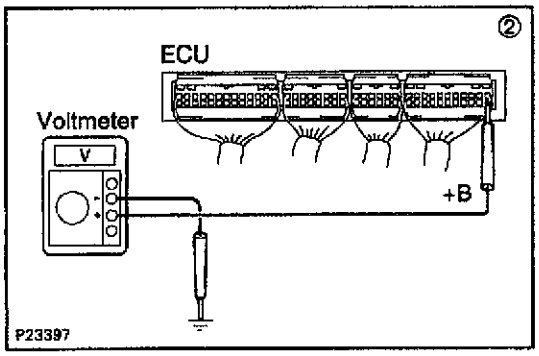

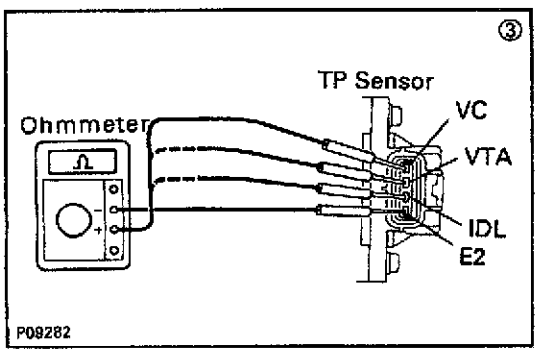

• **IDL – E2**

① There is no voltage between ECU terminals IDL and E2. **(IG SW ON)** (Throttle valve open)

② Check that there is voltage between ECU terminal +B and body ground. **(IG SW ON)**

NO → Refer to No.1. (See page EG-23)

OK → Check wiring between ECU terminal E1 and body ground.

OK → Try another ECU.

BAD → Repair or replace.

Refer to No.1. (See page EG-23) — BAD → Repair or replace.

OK → ③ Check TP sensor.

BAD → Repair or replace TP sensor.

OK → Check wiring between ECU and TP sensor.

OK → Try another ECU.

BAD → Repair or replace.

V06542

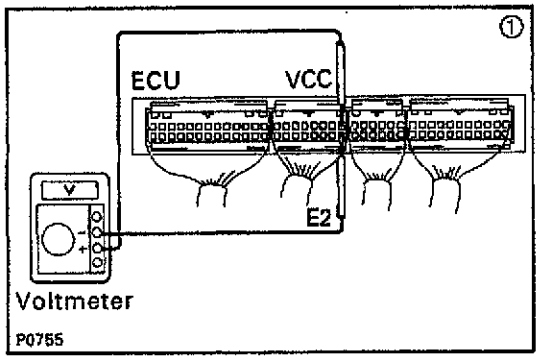

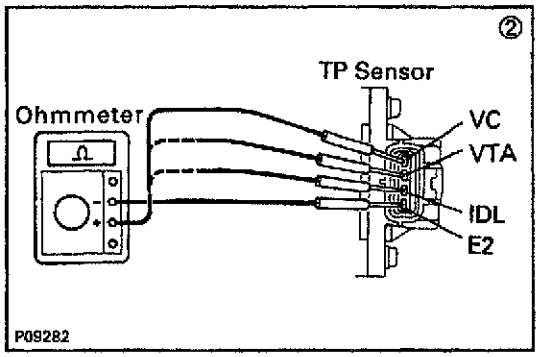

• **VC – E2**

① There is no voltage between ECU terminals VCC and E2. **(IG SW ON)**

↓

Check that there is voltage between ECU terminal +B and body ground. **(IG SW ON)**

↓ OK

② Check TP sensor.

↓ BAD

Repair or replace.

OK ↓

Check wiring between ECU and TP sensor.

↓ OK

Try another ECU.

BAD ↓

Repair or replace wiring.

NO →

Refer to No.1. (See page EG-23)

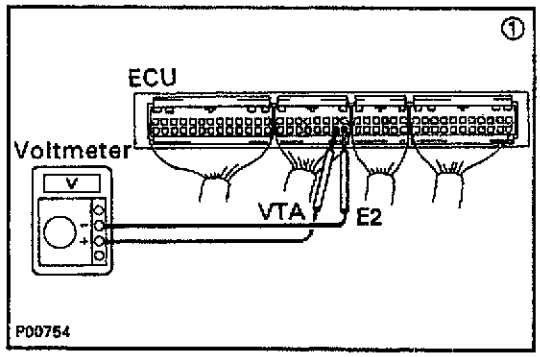

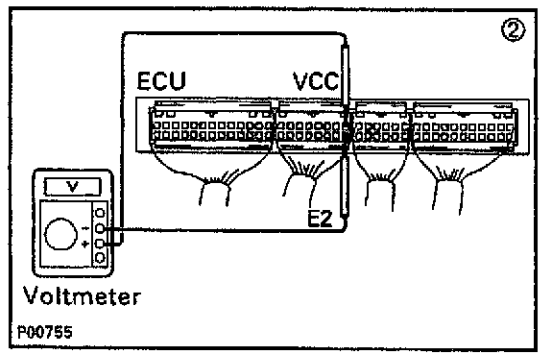

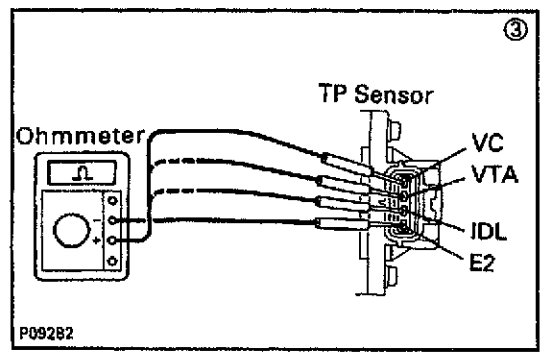

• **VTA – E2**

① There is no specified voltage at ECU terminals VTA and E2. **(IG SW ON)**

↓

② Check that there is voltage between ECU terminals VCC and E2. **(IG SW ON)**

NO ↓

Refer to VCC – E2 trouble section.

↓ OK

OK →

③ Check TP sensor. BAD → Repair or replace.

↓ OK

Check wiring between ECU and TP sensor. BAD → Repair or replace.

↓ OK

Try another ECU.

V06543

No.	Terminals	Trouble	Condition		STD voltage
3	VG – E21	No voltage	Idling	N position, A/C switch OFF	1.1 – 1.5 V

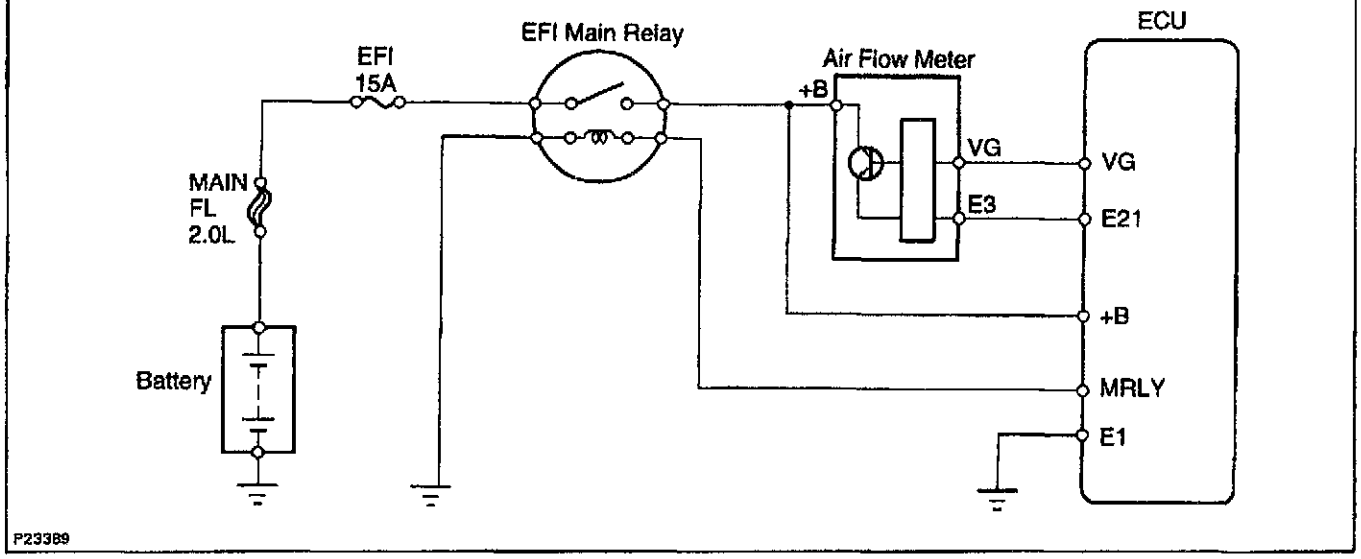

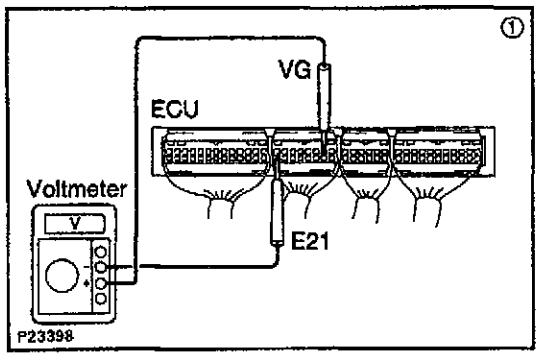

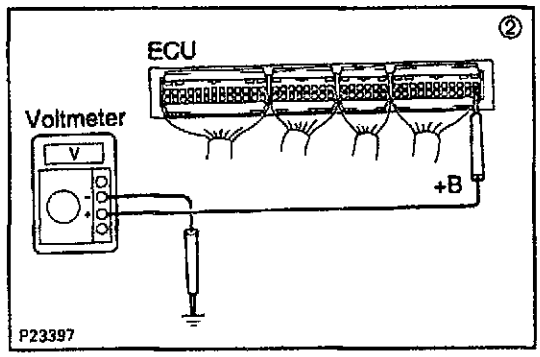

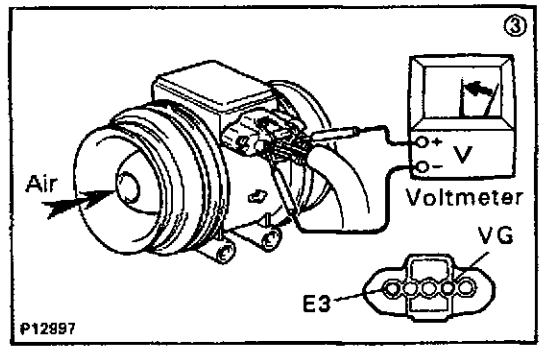

① There is no voltage between ECU terminals VG and E21. **(Idling)**

↓

② Check that there is voltage between ECU terminal +B and body ground. **(Idling)**

OK → ↓

NO → Refer to No.1. (See page EG-23)

↓

Check wiring between ECU terminal E1 and body ground.

OK → ↓

BAD → Repair or replace.

③ Check air flow meter. (See page EG-54)

BAD → Replace air flow meter.

OK → ↓

Check wiring between ECU and air flow meter.

OK → ↓

BAD → Repair or replace.

Try another ECU.

V06544

No.	Terminals	Trouble	Condition	STD voltage
4	#10 E01 S – #60 E02	No voltage	IG SW ON	9 – 14 V

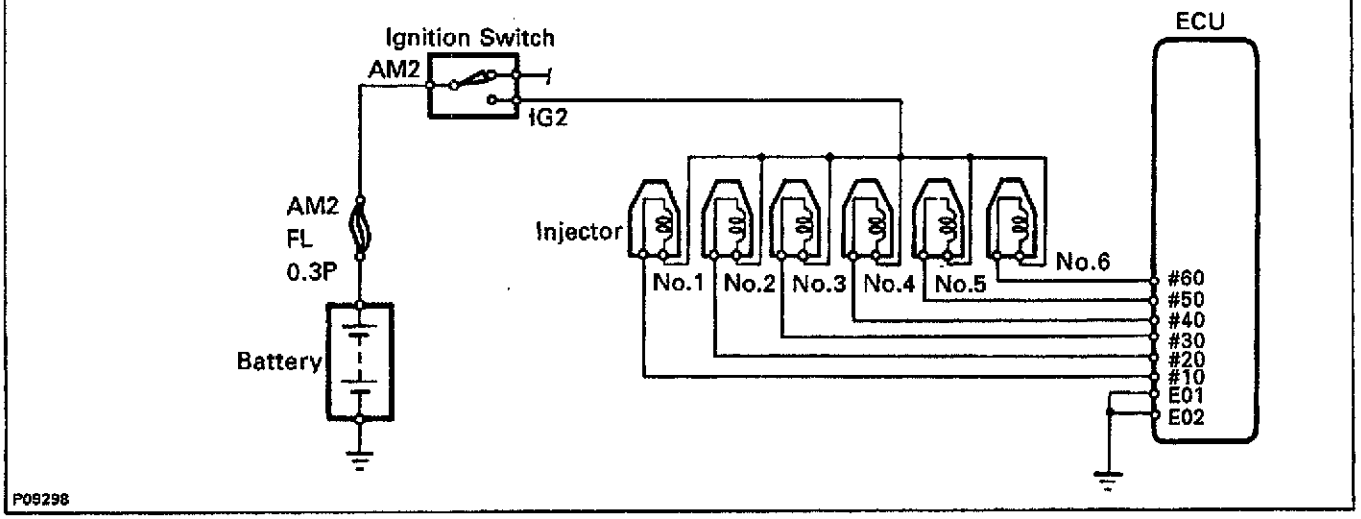

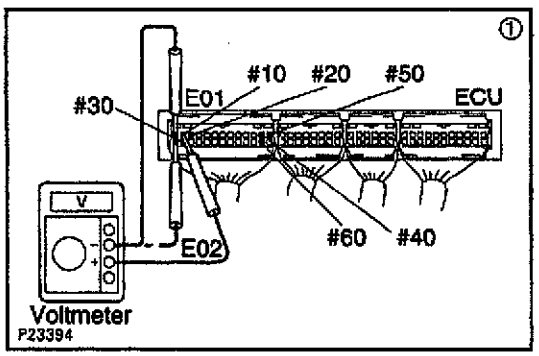

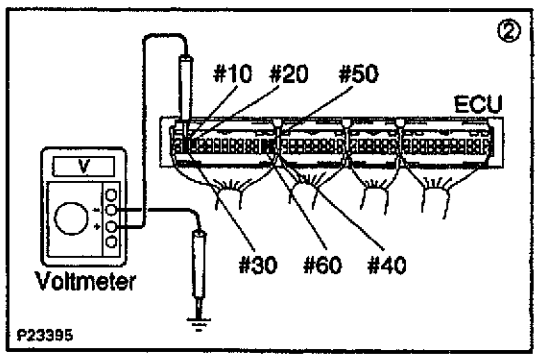

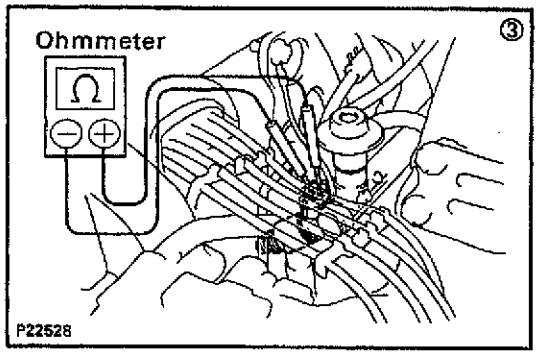

① There is no voltage between ECU terminals #10 ~ #60 and E01 and/or E02. **(IG SW ON)**

② Check that there is voltage between ECU terminal #10 ~ #60 and body ground.

NO → Check wiring between ECU terminal E01 and/or E02 and body ground.
- OK → Try another ECU.
- BAD → Repair or replace.

OK → Check fusible link and ignition switch.
- BAD → Repair or replace.

OK → ③ Check resistance of each injector.
STD resistance: Approx. 13.8 Ω
- BAD → Replace injector.

OK → Check wiring between ECU terminal #10 ~ #60 and battery.
- BAD → Repair or replace.

V06545

No.	Terminals	Trouble	Condition		STD voltage
5	THA – E2	No voltage	IG SW ON	Intake air temp. 20°C (68°F)	0.5 – 3.4 V

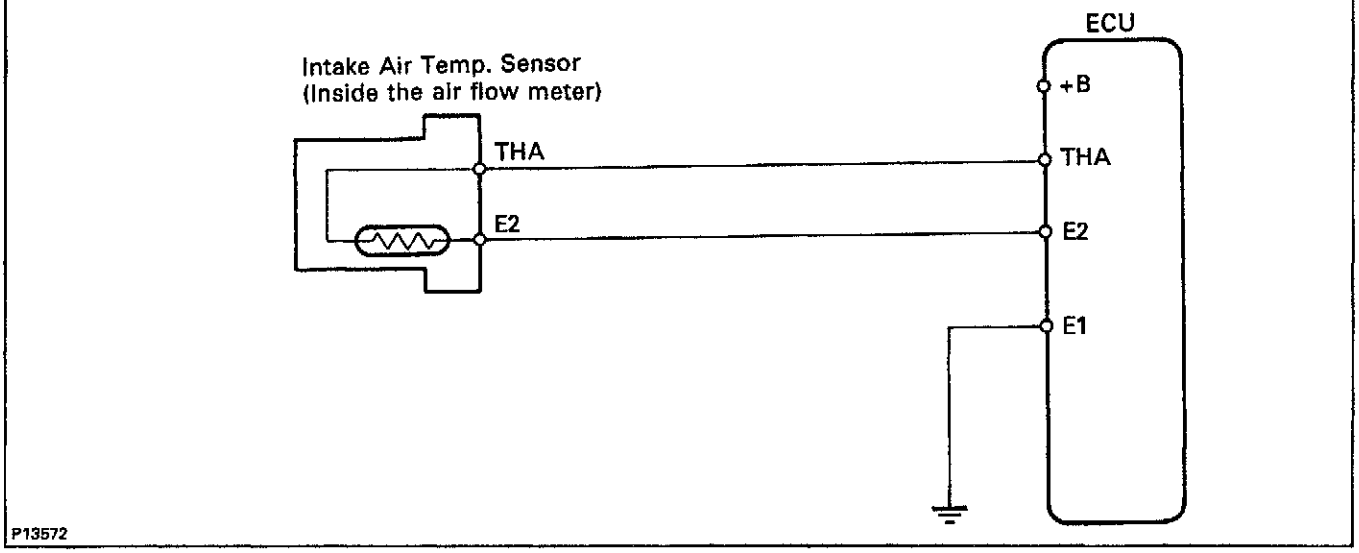

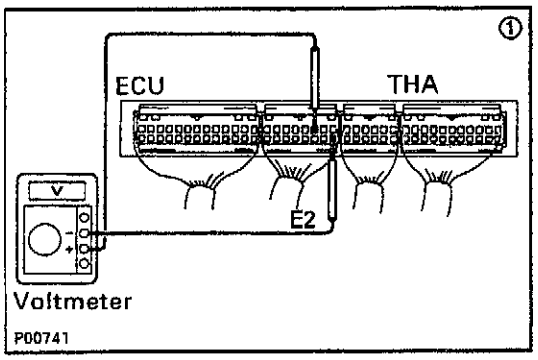

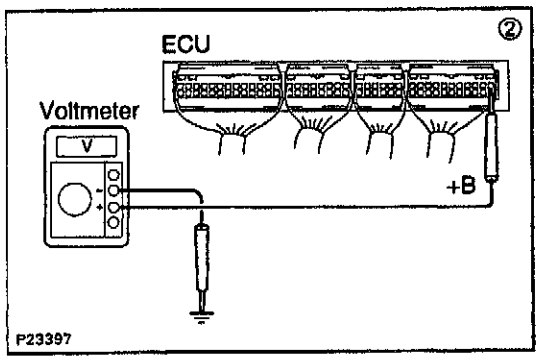

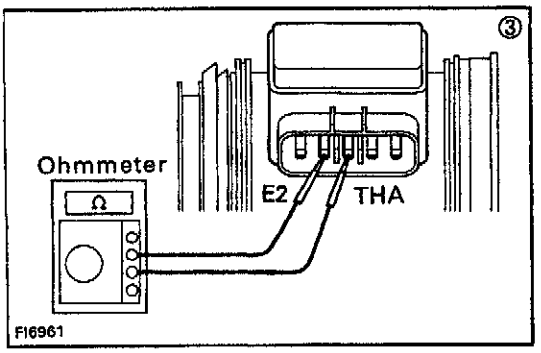

① There is no voltage between ECU terminals THA and E2. **(IG SW ON)**

② Check that there is voltage between ECU terminal +B and body ground. **(IG SW ON)**

OK → Check wiring between ECU terminal E1 and body ground.

NO → Refer to No.1. (See page EG-23)

Check wiring between ECU terminal E1 and body ground.

OK → ③ Check intake air temp. sensor.

BAD → Repair or replace.

③ Check intake air temp. sensor.

BAD → Replace air flow meter.

OK → Check wiring between ECU and intake air temp. sensor.

OK → Try another ECU.

BAD → Repair or replace.

V06546

No.	Terminals	Trouble	Condition		STD voltage
6	THW – E2	No voltage	IG SW ON	Engine coolant temp. 80°C (176°F)	0.2 – 1.0 V

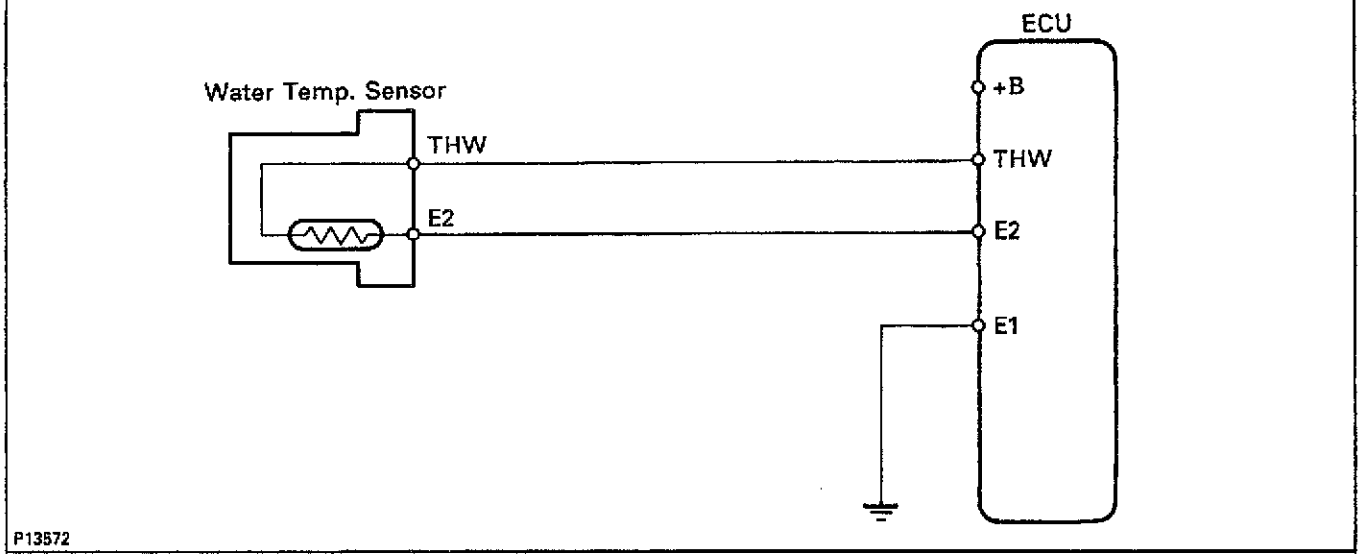

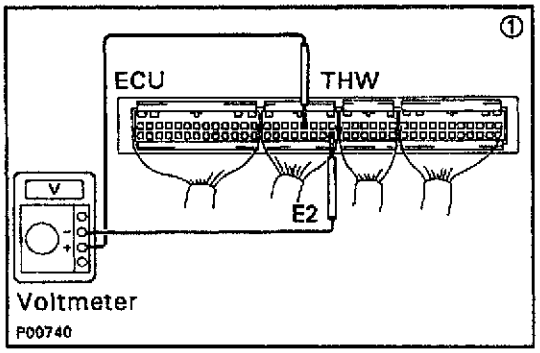

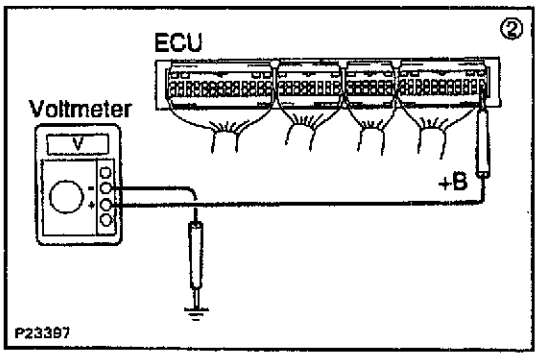

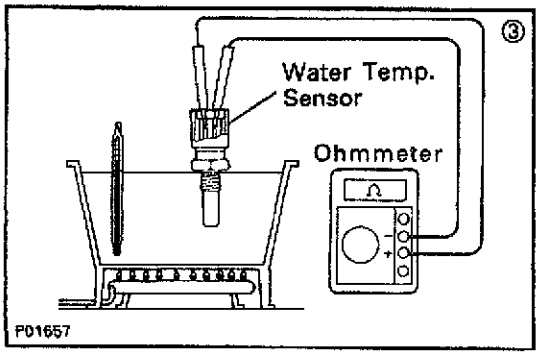

① There is no voltage between ECU terminals THW and E2. **(IG SW ON)**

② Check that there is voltage between ECU terminal +B and body ground. **(IG SW ON)**

OK → Check wiring between ECU terminal E1 and body ground.

NO → Refer to No.1. (See page EG-23)

OK → ③ Check water temp. sensor.

BAD → Repair or replace.

BAD → Replace water temp. sensor.

OK → Check wiring between ECU and water temp. sensor.

OK → Try another ECU.

BAD → Repair or replace.

V06547

No.	Terminals	Trouble	Condition	STD voltage
7	STA – E1	No voltage	Cranking	6 V or more

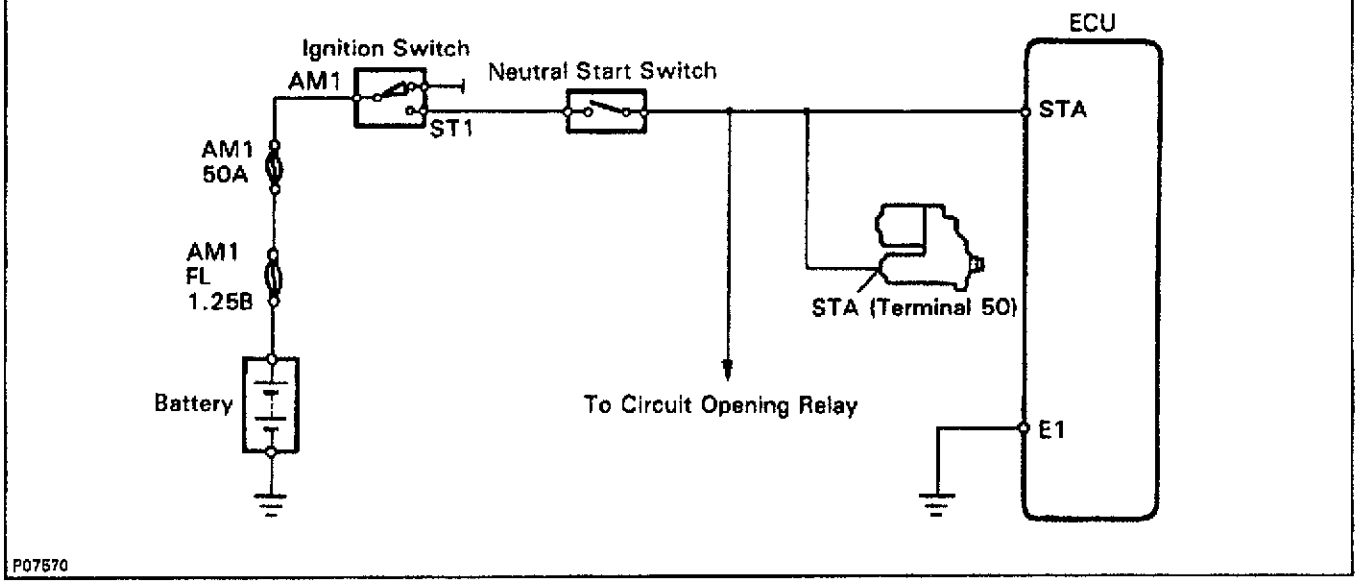

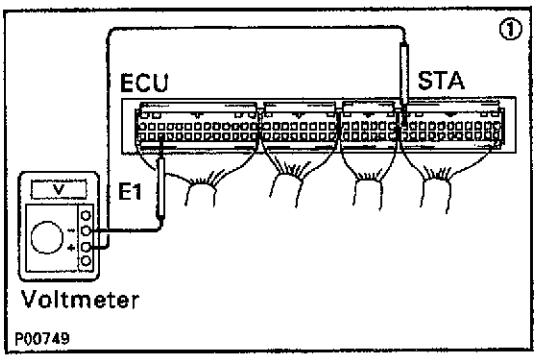

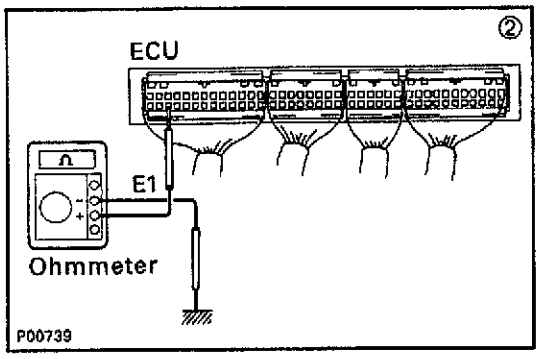

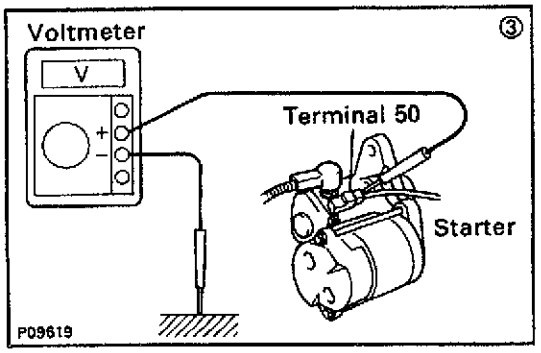

① There is no voltage between ECU terminals STA and E1. **(IG SW START)**

Check starter operation. — OK → Check wiring between ECU terminal STA and ignition switch terminal ST1.

BAD

OK → BAD → Repair or replace.

② Check wiring between ECU terminal E1 and body ground.

OK → Try another ECU.

BAD → Repair or replace.

Check H-fuse, fusible link,battery, wiring, ignition switch and neutral start switch. — BAD → Repair or replace.

OK

③ Check that there is voltage at starter terminal 50. **(IG SW START) STD voltage: 6 V or more**

OK → Check starter.

NO → Check wiring between ignition switch terminal ST1 and starter terminal 50.

V06548

No.	Terminals	Trouble	Condition	STD voltage
8	IGT – E1	No voltage	Idling	Palse generation

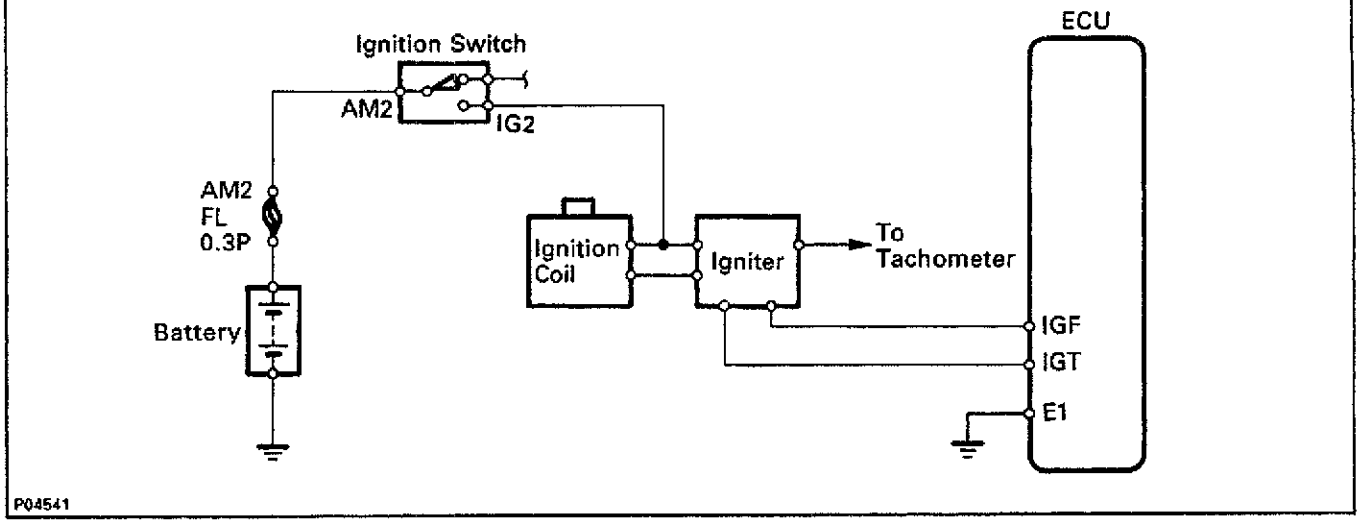

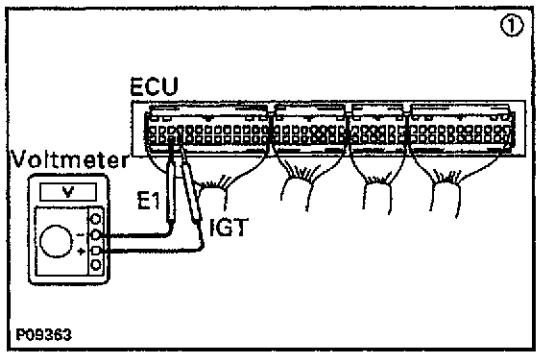

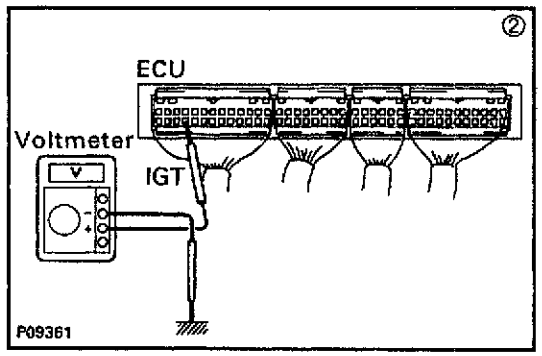

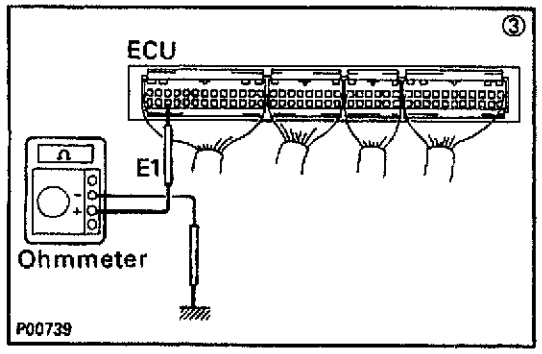

① There is no voltage between ECU terminals IGT and E1. **(Idling)**

② Check that there is voltage between ECU terminal IGT and body ground. **(Idling)**

NO

OK

③ Check wiring between ECU terminal E1 and body ground. — BAD → Repair or replace.

OK

Try another ECU.

Check fusible link and ignition switch. — BAD → Repair or replace.

OK

Check distributor. — BAD → Repair or replace.

OK

Check wiring between ECU and battery. — BAD → Repair or replace.

OK

Check igniter. — BAD → Repair or replace.

V06549

No.	Terminals	Trouble	Condition	STD voltage
9	ISC1 ~ ISC4 – E1	No voltage	IG SW ON	9 – 14 V

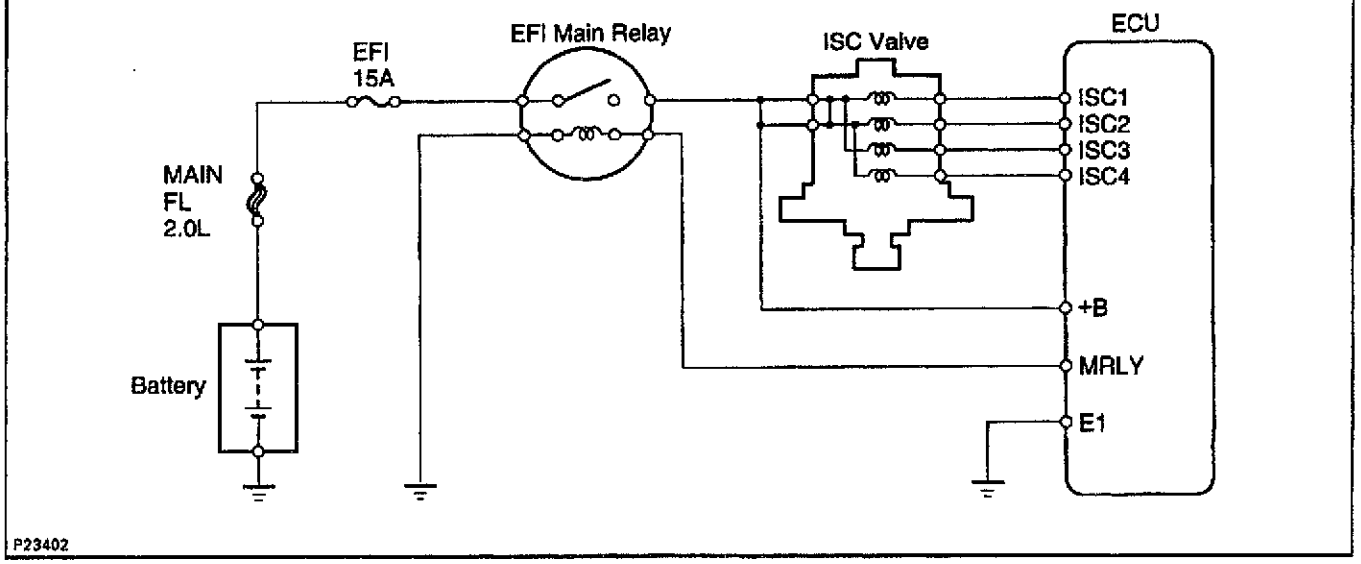

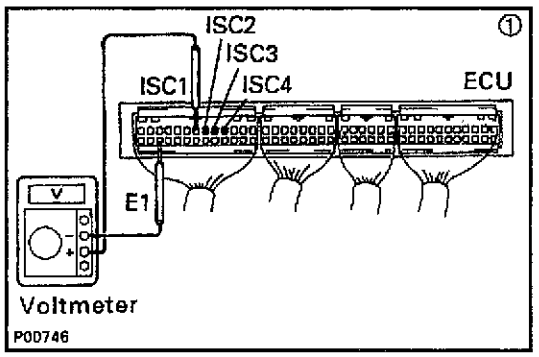

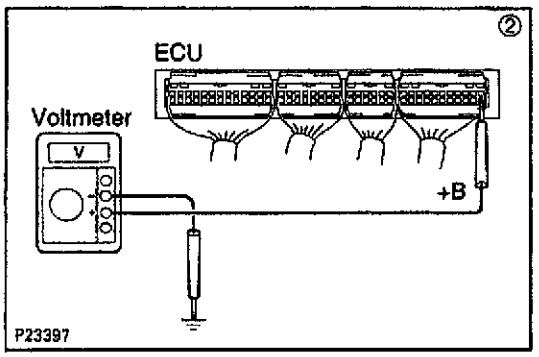

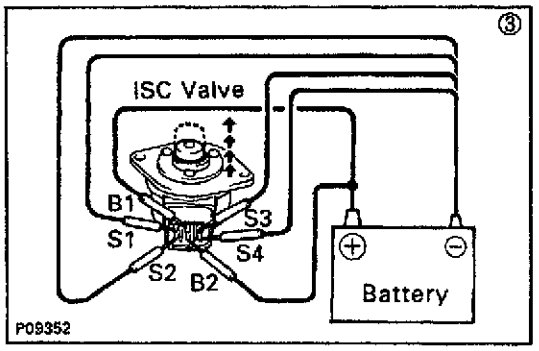

① There is no voltage between ECU terminals ISC1 ~ ISC4 and E1. **(IG SW ON)**

② Check that there is voltage between ECU terminal +B and body ground. **(IG SW ON)**

OK → ③ Check ISC valve.

NO → Refer to No.1. (See page EG-23)

Check wiring between ECU terminal E1 and body ground.

OK → ③ Check ISC valve.

BAD → Repair or replace.

③ Check ISC valve.

BAD → Replace ISC valve.

OK → Check wiring between ECU and EFI main relay.

OK → Try another ECU.

BAD → Repair or replace.

V06550

No.	Terminals	Trouble	Condition	STD voltage
10	W – E1	No voltage	No trouble ("CHECK" engine warning light off) and engine running.	9 – 14 V

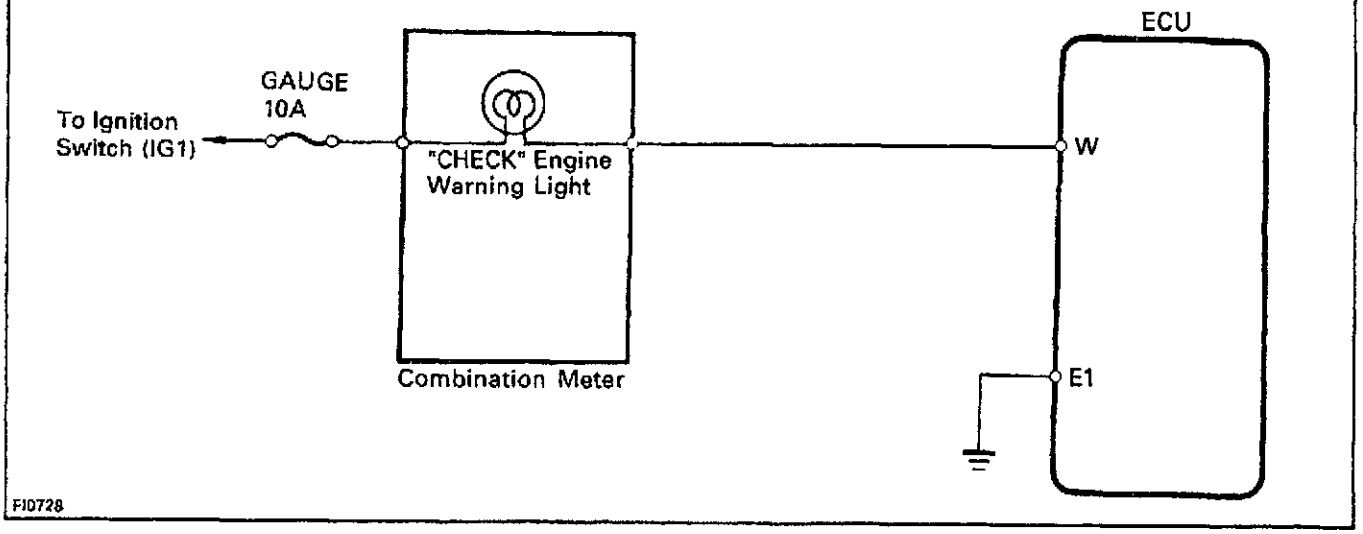

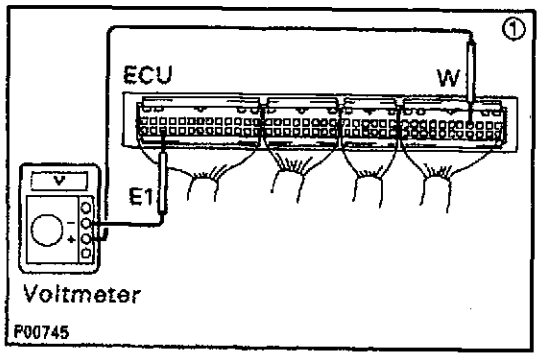

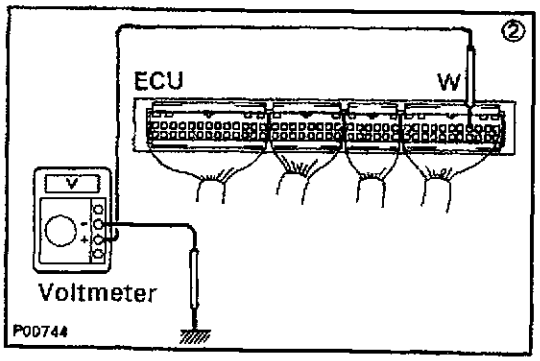

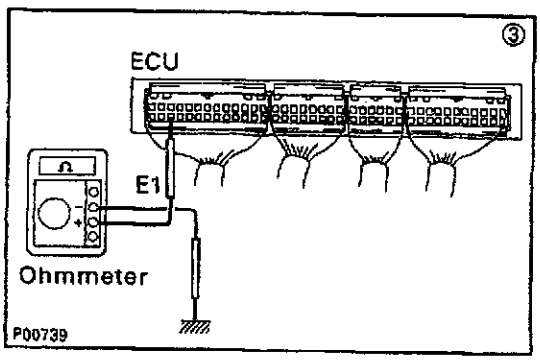

① There is no voltage between ECU terminals W and E1. (Idling)

② Check that there is voltage between ECU terminal W and body ground.

NO

OK

③ Check wiring between ECU terminal E1 and body ground.

OK

BAD

Try another ECU.

Repair or replace.

Check GAUGE fuse (10 A) and "CHECK" engine warning light.

OK

BAD

Repair or replace.

Fuse blows again

Check wiring between ECU terminal W and fuse.

BAD

Repair or replace.

V06551

Oxygen Sensor

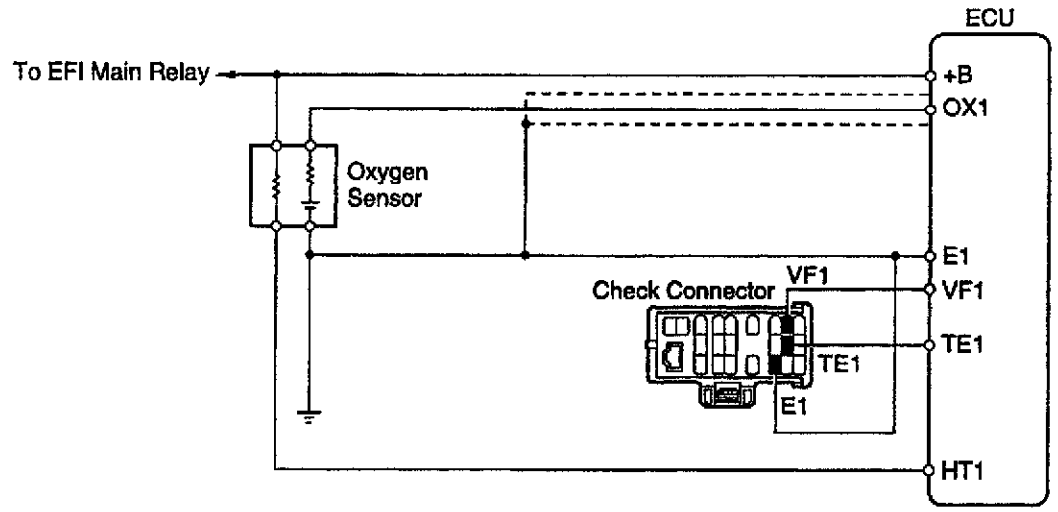

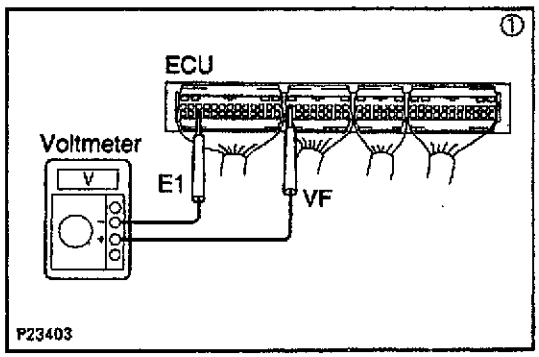

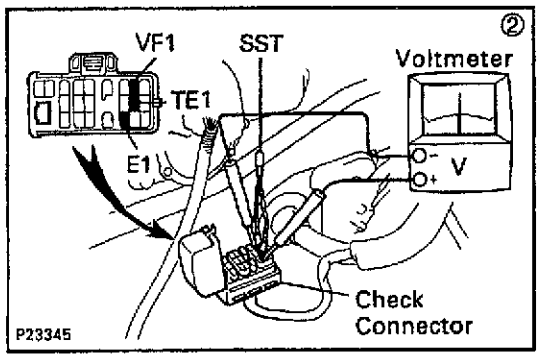

① There is no voltage between ECU terminals VF1 and E1.

Check that there is specified voltage between ECU terminal VF1 and body ground.

NO → OK

Check wiring between ECU terminal E1 and body ground.

OK → Try another ECU.

BAD → Repair or replace.

Check for air suction of air into exhaust system. BAD → Repair air suction.

OK

Check for air leak from air induction system. BAD → Repair air leak.

OK

Check spark plugs. BAD → Repair or replace.

OK

Check distributor and ignition system. BAD → Repair or replace.

OK

Check fuel pressure. BAD → Repair or replace.

OK

Check injectors. BAD → Repair or replace.

OK

Check air flow meter. BAD → Repair or replace.

OK

② Check operation of oxygen sensor. OK → System normal.

BAD

Check wiring between oxygen sensor and ECU connectors. BAD → Repair wiring.

OK

Repair oxygen sensor.

V06552