*1: All accessories and A/C are switch OFF.
*2: Station wagon only.
*3: Hardtop only.
*4: If the engine coolant temperature sensor circuit is open or shorted, the engine ECU assumes an engine coolant temp. value of 80°C (176°F).
*5: Europe only.
*6: When feedback control is forbidden, 0 V is displayed.
*7: A/T only.

G

# AIR FLOW METER (Station Wagon)

EG5K8–02

## COMPONENTS FOR REMOVAL AND INSTALLATION

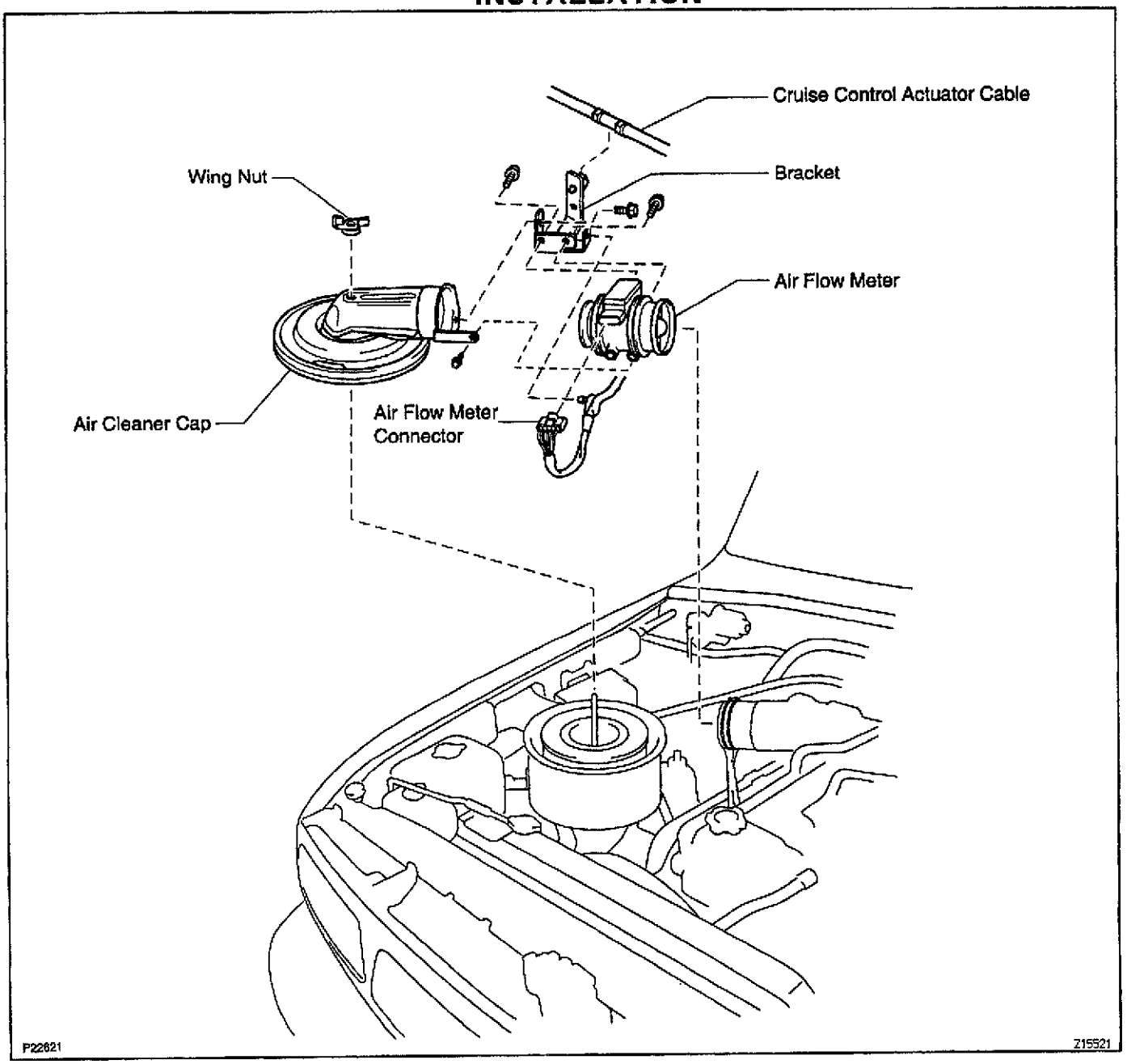

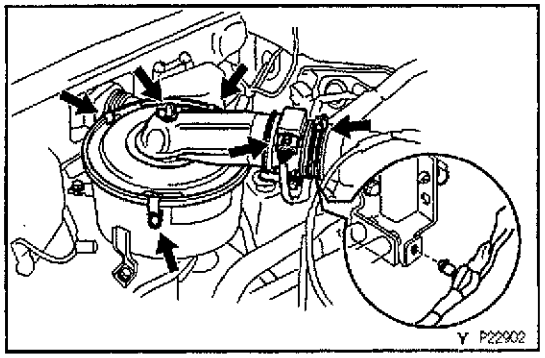


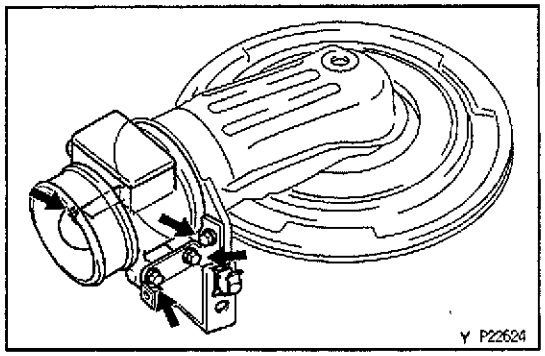


## AIR FLOW METER REMOVAL

EGSKC–02

**Installation is in the reverse order of removal.**

1. **REMOVE AIR CLEANER CAP AND AIR FLOW METER**

(a) Disconnect the air flow meter connector and wire clamp.
(b) Disconnect the cruise control actuator cable.
(c) Loosen the air cleaner hose clamp.
(d) Disconnect the 3 clips, and remove the wing nut, air cleaner cap and air flow meter.

2. **REMOVE AIR FLOW METER**

Remove the 4 bolts, bracket and air flow meter.
**Torque: 6.9 N·m (70 kgf·cm, 61 in.·lbf)**

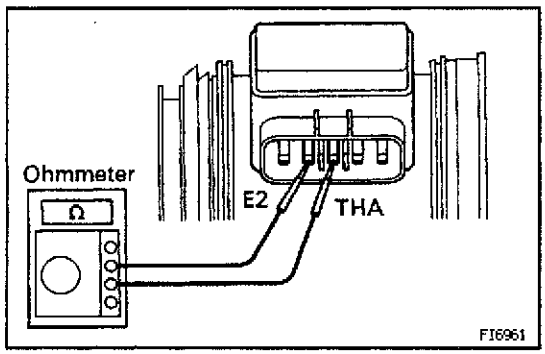


## AIR FLOW METER INSPECTION

EGSM4–01

1. **INSPECT AIR FLOW METER RESISTANCE**

Using an ohmmeter, measure the resistance between terminals THA and E2.

| Between terminals | Resistance | Temperature |
|---|---|---|
| THA – E2 | 10 – 20 kΩ | −20°C (−4°F) |
| THA – E2 | 4 – 7 kΩ | 0°C (32°F) |
| THA – E2 | 2 – 3 kΩ | 20°C (68°F) |
| THA – E2 | 0.9 – 1.3 kΩ | 40°C (104°F) |
| THA – E2 | 0.4 – 0.7 kΩ | 60°C (140°F) |
| THA – E2 | 0.2 – 0.4 kΩ | 80°C (176°F) |

If the resistance is not as specified, replace the air flow meter.

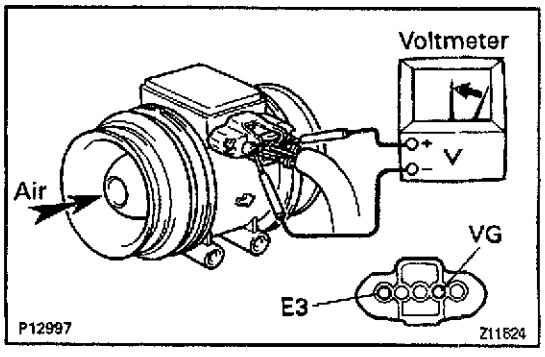


2. **INSPECT AIR FLOW METER OPERATION**

(a) Connect the air flow meter connector.
(b) Using a voltmeter, connect the positive (+) tester probe to terminal VG, and negative (−) tester probe to terminal E3.
(c) Blow air into the air flow meter, and check that the voltage fluctuates.
If operation is not as specified, replace the air flow meter.
(d) Disconnect the air flow meter connector.