# CIRCUIT OPENING RELAY
## (Station Wagon)
## COMPONENTS FOR REMOVAL AND INSTALLATION

EG1T6-06

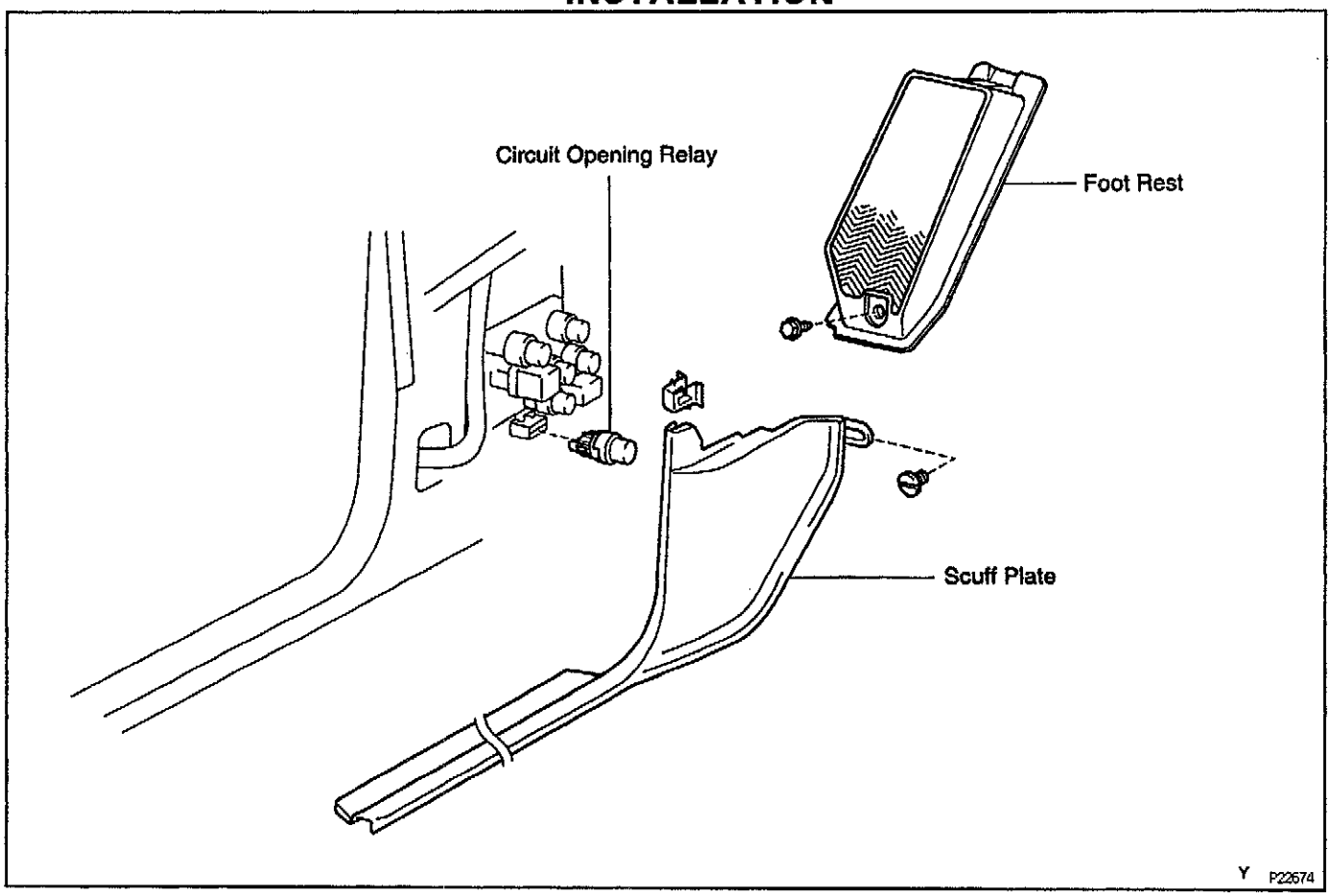


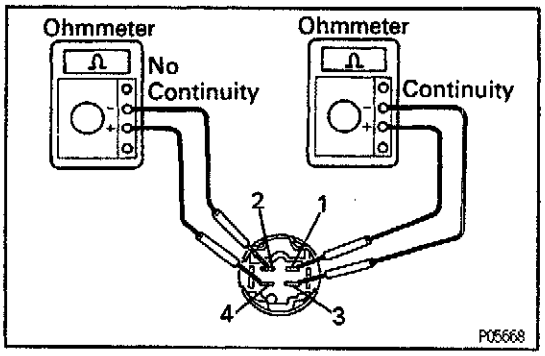


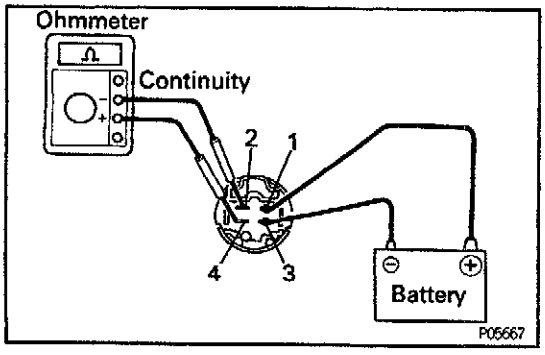


## CIRCUIT OPENING RELAY INSPECTION

EQ5KG-02

1. **REMOVE CIRCUIT OPENING RELAY**
2. **INSPECT CIRCUIT OPENING RELAY**

**A. Inspect relay continuity**

(a) Using an ohmmeter, check that there is continuity between terminals 1 and 3.

(b) Check that there is no continuity between terminals 2 and 4.

If continuity is not as specified, replace the relay.

**B. Inspect relay operation**

(a) Apply battery voltage across terminals 1 and 3.

(b) Using an ohmmeter, check that there is continuity between terminals 2 and 4.

If operation is not as specified, replace the relay.

3. **REINSTALL CIRCUIT OPENING RELAY**