DI3S6–01

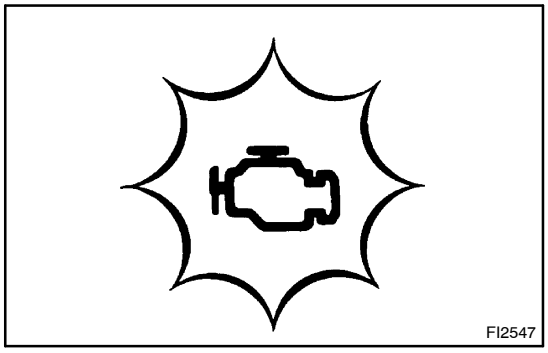
FI2547

PRE–CHECK

1. DIAGNOSIS SYSTEM

(a) Description

When troubleshooting Multiplex OBD (M–OBD) vehicles, the only difference from the usual troubleshooting procedure is that you connect to the vehicle the hand–held tester, and read off various data output from the vehicle's engine ECU.

The vehicle's on–board computer lights up the check engine warning light on the instrument panel when the computer detects a malfunction in the computer itself or in drive system components. In addition to the check engine warning light lighting up when a malfunction is detected, the applicable diagnostic trouble codes are recorded in the engine ECU memory. (See page DI–14)

If the malfunction has been repaired, the check engine warning light goes off automatically but the diagnostic trouble codes remain recorded in the engine ECU memory.

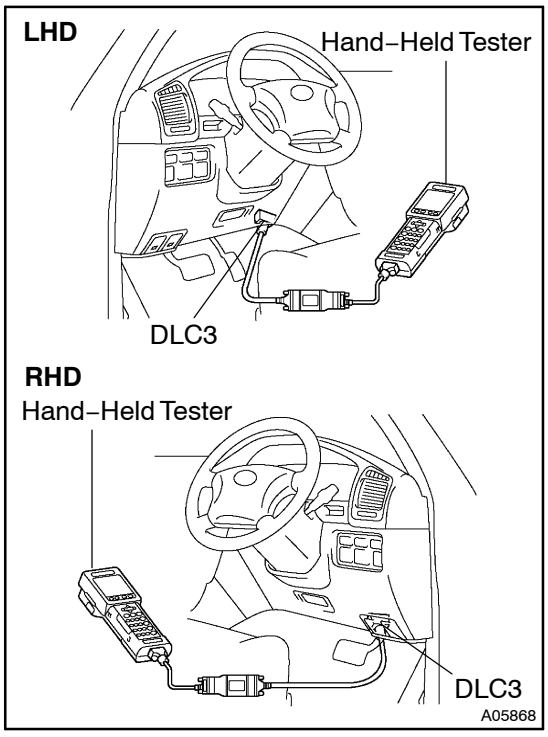

To check the diagnostic trouble codes, connect the hand–held tester to Data Link Connector 3 (DLC3) on the vehicle or read the number of blinks of the check engine warning light when TC and CG terminals on the DLC3 are connected. The hand–held tester also enables you to erase the diagnostic trouble codes and activate the several actuators and check freeze frame date and various forms of engine data. (For operating instructions, see the hand–held tester instruction book.)

The diagnosis system operates in normal mode during normal vehicle use. It also has a check (test) mode for technicians to simulate malfunction symptoms and troubleshoot. Some diagnostic trouble codes use 2 trip detection logic* to prevent erroneous detection and ensure thorough malfunction detection. By switching the engine ECU to check (test) mode using hand–held tester when troubleshooting, the technician can cause the check engine warning light to light up for a malfunction that is only detected once or momentarily. (hand–held tester only) (See page DI–14)

*2 trip detection logic

When a logic malfunction is first detected, the malfunction is temporarily stored in the engine ECU memory. If the same malfunction is detected again during the second drive test, this second detection causes the check engine warning light to light up.

The 2 trip repeats the same mode a 2nd time. (However, the IG switch must be turned OFF between the 1st trip and 2nd trip).

Freeze frame data:
Freeze frame data records the engine condition when malfunction is detected.
Because freeze frame data records the engine conditions (fuel system, calculator load, engine coolant temperature, fuel trim, engine speed, vehicle speed, etc.) when the malfunction is detected, when troubleshooting it is useful for determining whether the vehicle was running or stopped, the engine warmed up or not, the air–fuel ratio lean or rich, etc. at the time of the malfunction.

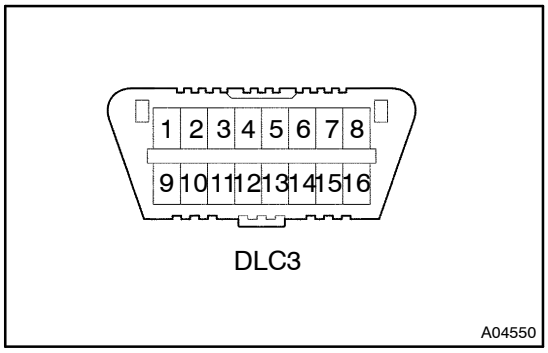

(b) Check the DLC3.
The vehicle's engine ECU uses ISO 14230 for communication. The terminal arrangement of DLC3 complies with SAE J1962 and matches the ISO 14230 format.

Terminal No.	Connection/Voltage or Resistance	Condition
7	Bus ⊕ Line / Pulse generation	During transmission
4	Chassis Ground / ↔ Body Ground 1 Ω or less	Always
16	Battery Positive / ↔ Body Ground 9 ~ 14 V	Always

HINT:
If your display shows "UNABLE TO CONNECT TO VEHICLE" when you have connected the cable of the hand–held tester to DLC3, turned the ignition switch ON and operated the hand–held tester, there is a problem on the vehicle side or tool side.

(1) If communication is normal when the tool is connected to another vehicle, inspect DLC3 on the original vehicle.
(2) If communication is still not possible when the tool is connected to another vehicle, the problem is probably in the tool itself, so consult the Service Department listed in the tool's instruction manual.

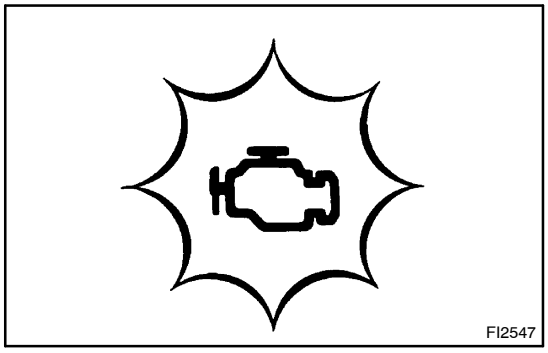
FI2547

2. INSPECT DIAGNOSIS (Normal Mode)

(a) Check the check engine warning light.

(1) The check engine warning light comes on when the ignition switch is turned ON and the engine is not running.

HINT:
If the check engine warning light does not light up, troubleshoot the combination meter.

(2) when the engine is started, the check engine warning light should go off. If the lamp remains on, the diagnosis system has detected a malfunction or abnormality in the system.

(b) Check the DTC using hand–held tester.

NOTICE:
When the diagnosis system is switched from normal mode to check test mode, it erases all DTCs and freezed frame data recorded in normal mode. So before switching modes, always check the DTCs and freezed frame data, and note them down.

(1) Prepare the hand–held tester.
(2) Connect the hand–held tester to the DLC3.
(3) Turn the ignition switch ON and switch the hand–held tester main switch ON.
(4) Use the hand–held tester to check the DTCs and freezed frame data, note them down. (for operating instructions, see the hand–held tester's instruction book.)
(5) Confirm the details of the DTCs.

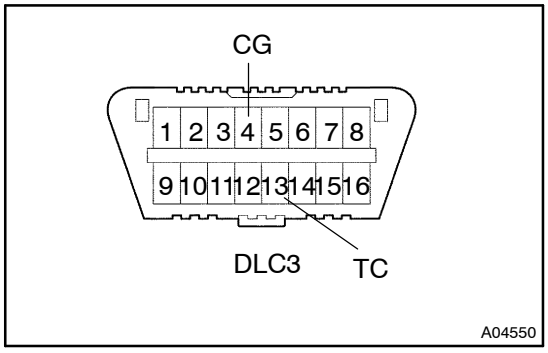

A04550

(c) Check the DTC not using hand–held tester.

(1) Turn the ignition switch ON.
(2) Using SST, connect between terminals 13 (TC) and 4 (CG) of DLC3.
SST 09843–18040

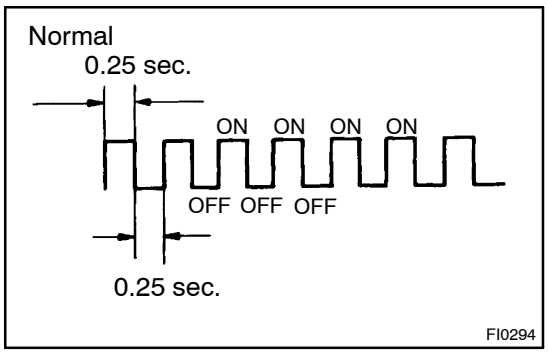

FI0294

(3) Read the diagnostic trouble code from check engine warning light.

HINT:
If a diagnostic trouble code is not output, check the diagnostic connector (DLC3) circuit (See page DI–100).

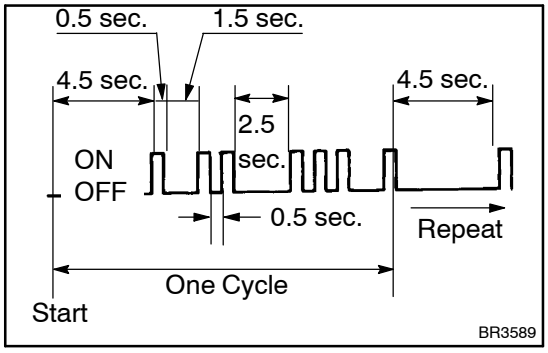

As an example, the blinking patterns for codes; normal, 12 and 31 are as shown on the illustration.

(1) Check the details of the malfunction using the diagnostic trouble code chart on page DI–14.

(2) After completing the check, disconnect terminals 13 (TC) and 4 (CG) and turn off the display.

HINT:

In the event of 2 or more malfunction codes, indication will begin from the smaller numbered code and continue in order to the larger.

NOTICE:

When simulating symptoms without a hand–held tester to check the DTCs, use normal mode. For code on the DTCs chart subject to "2 trip detection logic", turn the ignition switch OFF after the symptom is simulated the first time. Then repeat the simulation process again. When the problem has been simulated twice, the check engine warning light lights up and the DTCs are recorded in the engine ECU.

3. INSPECT DIAGNOSIS (Check (Test) Mode)

HAND–HELD TESTER only:

Compared to the normal mode, the check mode has an increased sensitivity to detect malfunctions.

Furthermore, the same diagnostic items which are detected in the normal mode can also be detected in the check (test) mode.

(a) Check the DTC.

(1) Initial conditions.

- Battery positive voltage 11 V or more
- Throttle valve fully closed.
- Transmission in neutral position
- Air conditioning switched OFF.

(2) Turn the ignition switch OFF.

(3) Prepare the hand–held tester.

(4) Connect the hand–held tester to the DLC3.

(5) Turn the ignition switch ON and push the hand–held tester main switch ON.

(6) Switch the hand–held tester normal mode to check (test) mode. (Check that the check engine warning light flashes.).

(7) Start the engine. (The check engine warning light goes out after the engine start.).

(8) Simulate the conditions of the malfunction described by the customer.

NOTICE:

Leave the ignition switch ON until you have checked the DTCs, etc.

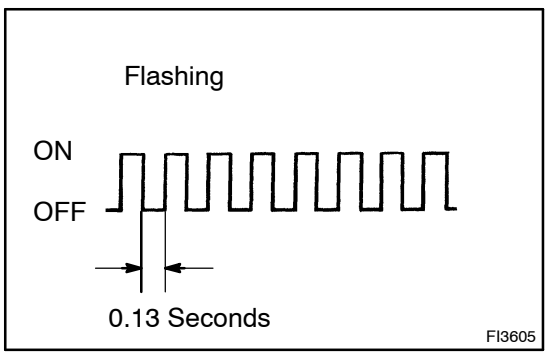

(9) After simulating the malfunction conditions, use the hand–held tester diagnosis selector to check the DTCs and freezed frame data, etc.

HINT:

Take care not to turn the ignition switch OFF. Turning the ignition switch OFF switches the diagnosis system from check (test) mode to normal mode, so all diagnostic codes, etc. are erased.

(10) After checking the DTCs, inspect the applicable circuit.

(b) Clear the DTC.

The following actions will erase the DTCs and freezed frame data.

(1) Operating the hand–held tester to erase the codes. (See the hand–held tester's instruction book for operating instructions.)

(2) Disconnecting the battery terminals or ECD fuse.

NOTICE:

If the hand–held tester switches the engine ECU from normal mode to check (test) mode or vice–versa, or if the ignition switch is turned from ON to ACC or OFF during check (test) mode, the DTCs and freezed frame data will be erased.

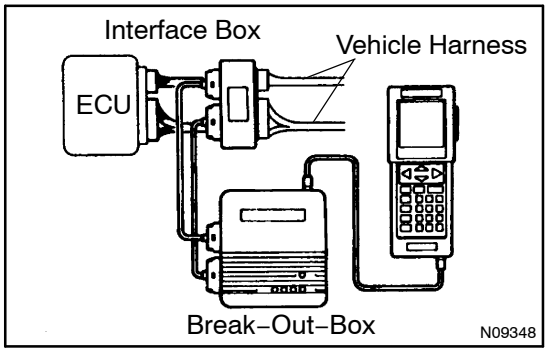

(c) Measure the engine ECU terminal values using break–out box and hand–held tester.

(1) Hook up the break–out–box and hand–held tester to the vehicle.

(2) Read the engine ECU input/output values by following the prompts on the tester screen.

HINT:

Hand–held tester has a "Snapshot" function.

This records the measured values and is effective in the diagnosis of intermittent problems.

Please refer to the hand–held tester/break–out–box operator's manual for further details.

4. FAIL–SAFE CHART

If any of the following codes is recorded, the engine ECU enters fail–safe mode.

DTC No.	Fail–Safe Operation	Fail–Safe Deactivation Conditions
12	TCV duty is fixed at 30.0 %	2 of more TDC signals are detected for 4 engine revolution
13	•Fuel cut •TCV duty is fixed at 1.0 % •Close diesel throttle valve	2 of more NE signals are detected for 0.5 sec.
19(1)	Accelerator pedal closed position SW ON : Accelerator pedal position is fixed at 0 % Accelerator pedal closed position SW OFF : Accelerator pedal position is fixed at 8 %	+B OFF
19(2)	Accelerator pedal closed position SW ON : Accelerator pedal position is fixed at 0 % Accelerator pedal closed position SW OFF : Accelerator pedal position is fixed at 8 %	+B OFF
	Accelerator pedal position below 10 %	+B OFF
19(3)	When the idle SW is faulty. Accelerator pedal closed position SW ON: Accelerator pedal position is fixed at 0 % Accelerator pedal closed position SW OFF: Accelerator pedal position is fixed at 8 %	+B OFF
	When the idle SW is okay. Idle SW ON : Accelerator pedal position is fixed at 0 % Idle SW OFF : Accelerator pedal position below 10 %	+B OFF
19(4)	Accelerator pedal position below 10 %	+B OFF
22	Engine coolant temp. is fixed at 100°C (212°F)	Return to normal condition
24	Intake air temp. is fixed at 20°C (68°F)	Return to normal condition
35	Intake air pressure is fixed at 101.3 kPa (760 mmHg, 30 in.Hg)	Return to normal condition
39	Fuel temp. is fixed at 60°C (140°F)	Return to normal condition
42	Vehicle speed is fixed at 0 km/h (0 mph)	Vehicle speed > 0 km/h (0 mph)

5. CHECK FOR INTERMITTENT PROBLEMS

HAND–HELD TESTER only:

By putting the vehicle's engine ECU in check (test) mode, 1 trip detection logic is possible instead of 2 trip detection logic and sensitivity to detect open circuits is increased. This makes it easier to detect intermittent problems.

(a) Clear the DTC (See page DI–4).
(b) Set the check (test) mode (See page DI–4).
(c) Perform a simulation test (See page IN–9).
(d) Check the connector and terminal (See page IN–19).
(e) Handle the connector (See page IN–19).

6. BASIC INSPECTION

When the malfunction code is not confirmed in the DTC check, troubleshooting should be carried out in the order for all possible circuits to be considered as the cases of the problems.

In many cases, by carrying out the basic engine check shown in the following flow chart, the location causing the problem can be found quickly and efficiently. Therefore, use of this check is essential in engine trouble-shooting.

1	**Is battery positive voltage 11 V or more when engine is stopped ?**

NO → **Charge or replace battery.**

YES

2	**Is engine cranked ?**

NO → **Proceed to problem symptoms table on page DI–19.**

YES

3	**Check air filter (See page EM–1).**

NG → **Repair or replace.**

OK

4	**Check fuel quality.**

CHECK:

- Check that use only diesel fuel.
- Check that the fuel does not contain any impurity.

NG → **Replace fuel.**

OK

5	Check engine oil (See page LU–1).

NG → Add or replace.

OK

6	Check coolant (See page CO–1).

NG → Replace coolant.

OK

7	Check injection timing (See page EM–14).

NG → Adjusting injection timing.

OK

8	Check idle speed and maximum speed (See page EM–17).

NG → Repair or replace injection pump.

OK

9	Check diagnostic connector (DLC3) circuit (See page DI–100).

NG → Repair or replace.

OK

10	**Check vacuum pump (See page EC–3).**

NG → **Repair or replace.**

OK

Proceed to problem symptoms table on page DI–19.

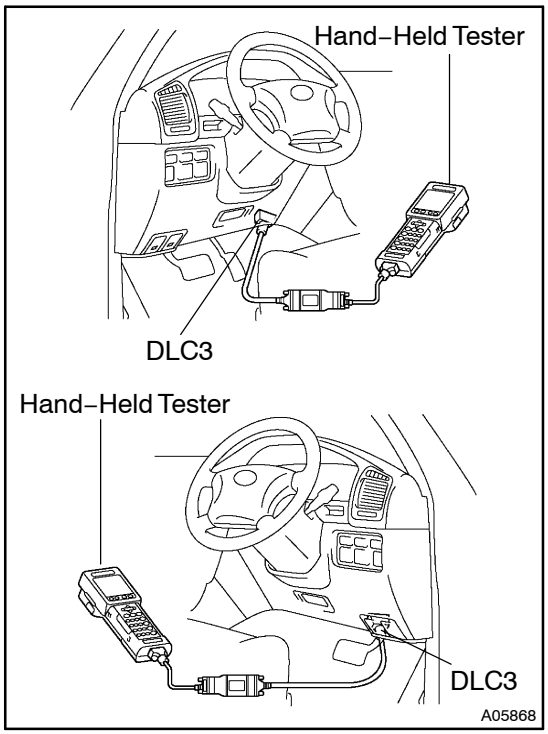

7. REFERENCE VALUE OF ENGINE ECU DATA

NOTICE:

The values given below for ”Normal Condition” are representative values, so a vehicle may still be normal even if its values from those listed here. So do not decide whether a part is faulty or not solely according to the ”Normal Condition” here.

HINT:

Engine engine ECU data can be monitored by hand–held tester.

(a) Connect the hand–held tester to the DLC3.

(b) Monitor engine ECU data by following the prompts on the tester screen.

Please refer to the hand–held tester operator’s manual for further detail.

(c) Reference Value

Item	Inspection Condition	Reference Value
INJECTION VOLUME	Engine at idling *1	4 – 12 mm^3
	Engine racing at 2,000 rpm *1	4 – 8 mm^3
	Engine racing at 3,000 rpm *1	5 – 9 mm^3
INJECTION TIMING	Engine at idling *1	17.0 – 19.0˚CA
	Engine racing at 2,000 rpm *1	11.7 – 15.7˚CA
	Engine racing at 3,000 rpm *1	17.0 – 23.0˚CA
ENGINE SPD	RPM kept stable (Comparison with tachometer)	No great changes
PIM	Engine at idling *1	91 – 111 kPa (683–833 mmHg, 26.9–32.8 in.Hg)
	Engine racing at 2,000 rpm *1	97 – 117 kPa
	Engine racing at 3,000 rpm *1	110 – 130 kPa
COOLANT TEMP	Engine at normal operating temp.	75 – 95˚C (167 – 203˚F) *2
INTAKE AIR	Engine at normal operating temp.	Ambient temp. – 140˚C
FUEL TEMP	Engine at normal operating temp.	Ambient temp. – 65˚C
ACCELE POSITION	Accelerator pedal fully closed	0 – 20 %
	Accelerator pedal fully opened	59 – 100 %
	From closed position to wide open accelerator pedal	Gradually increases
VEHICLE SPD	During driving (Comparison with speed meter)	No large differences
A/C SIG	A/C switch ON	ON
IDL SIG	Accelerator pedal full closed	ON
STARTER SIG	During cranking	ON
A/C CUT SIG	A/C switch OFF	ON
EGR SYSTEM	Idling	ON
NSW *3	Neutral start switch signal	P or N position : ON
PS OIL PRESS SW	Power steering oil pressure switch signal	Turn steering wheel : ON
ACCEL CLOSE SW	Accelerator pedal fully closed	ON

HINT:

*1: All accessories and A/C are switched OFF.

*2: If the water temp. sensor circuit is open or shorted, the engine ECU.

*3: A/T only