DI31O–02

CIRCUIT INSPECTION

DTC	12	Crankshaft Position Sensor Circuit Malfunction

CIRCUIT DESCRIPTION

The crankshaft position sensor in the Engine Control System contains signal plate and a pickup coil for TDC signal. The TDC signal plate has 1 tooth on its outer circumference. The TDC signal sensor generates 1 signal for every engine revolution. The engine ECU detects the top dead center by the TDC signals.
The engine speed sensor in the Engine Control System contains signal plate and a pickup coil for NE signal. The NE signal plate has 78 teeth and is mounted in the injection pump. The NE signal sensor generates 78 signals of engine 2 revolutions. The engine ECU detects the engine speed and cam lift position of the injection pump. The engine ECU uses TDC signal and NE signals for injection timing control. And NE signal is used for injection volume control, also.

DTC No.	DTC Detecting Condition	Trouble Area
12	No TDC signal to engine ECU at 400 rpm or more	• Open or short in crankshaft position sensor circuit • Crankshaft position sensor • Engine ECU

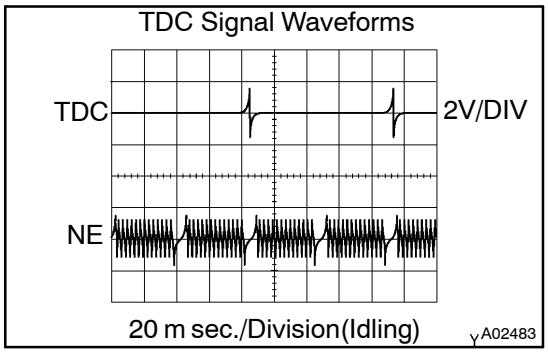

Reference: INSPECTION USING OSCILLOSCOPE
During cranking or idling, check between terminals TDC+ and TDC– of engine ECU.
HINT:
The correct wavaforms are as shown.

WIRING DIAGRAM

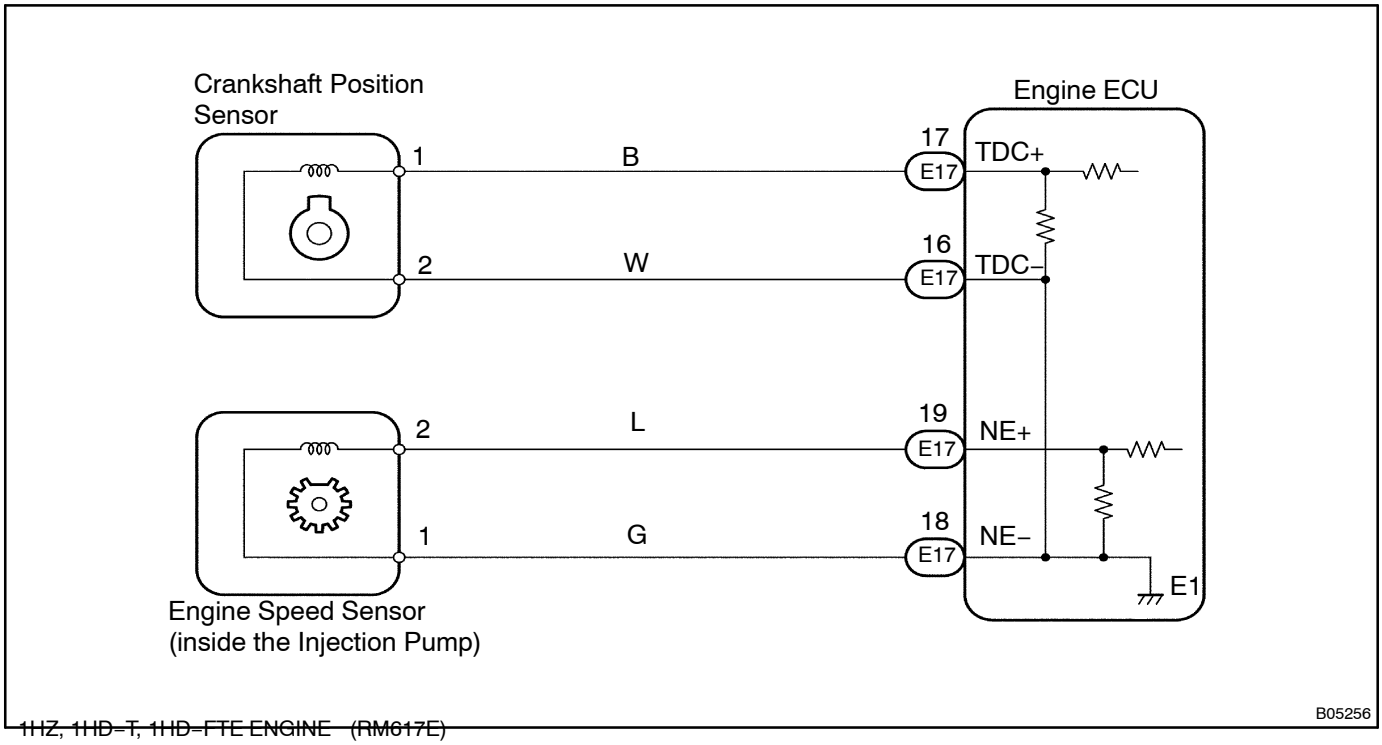

INSPECTION PROCEDURE

1	Check resistance of crankshaft position sensor (TDC) (See page ED–8).

NG → Replace crankshaft position sensor.

OK

2	Check for open and short in harness and connector between engine ECU and crankshaft position sensor (See page IN–19).

NG → Repair or replace harness or connector.

OK

3	Inspection sensor installation.

NG → Tighten sensor.

OK

Check and replace engine ECU (See page IN–19).