DI31Q–02

DTC	14	Timing Control System Malfunction

CIRCUIT DESCRIPTION

The engine ECU control the injection timing by actuating the timing control valve. The timing control valve is mounted on the injection pump and delay one by duty control of pump internal fuel pressure.
The engine ECU detects the injection advance angle by TDC and NE signals.

DTC No.	DTC Detecting Condition	Trouble Area
14	After engine warm up and during, actual injection timing is different from target value of engine ECU calculated for several sec.	• Open or short in timing control valve circuit • Timing control valve • Fuel filter (Clogging) • Fuel (Freezing, Air in) • Injection pump (Internal pressure and timing control valve) • Engine ECU

WIRING DIAGRAM

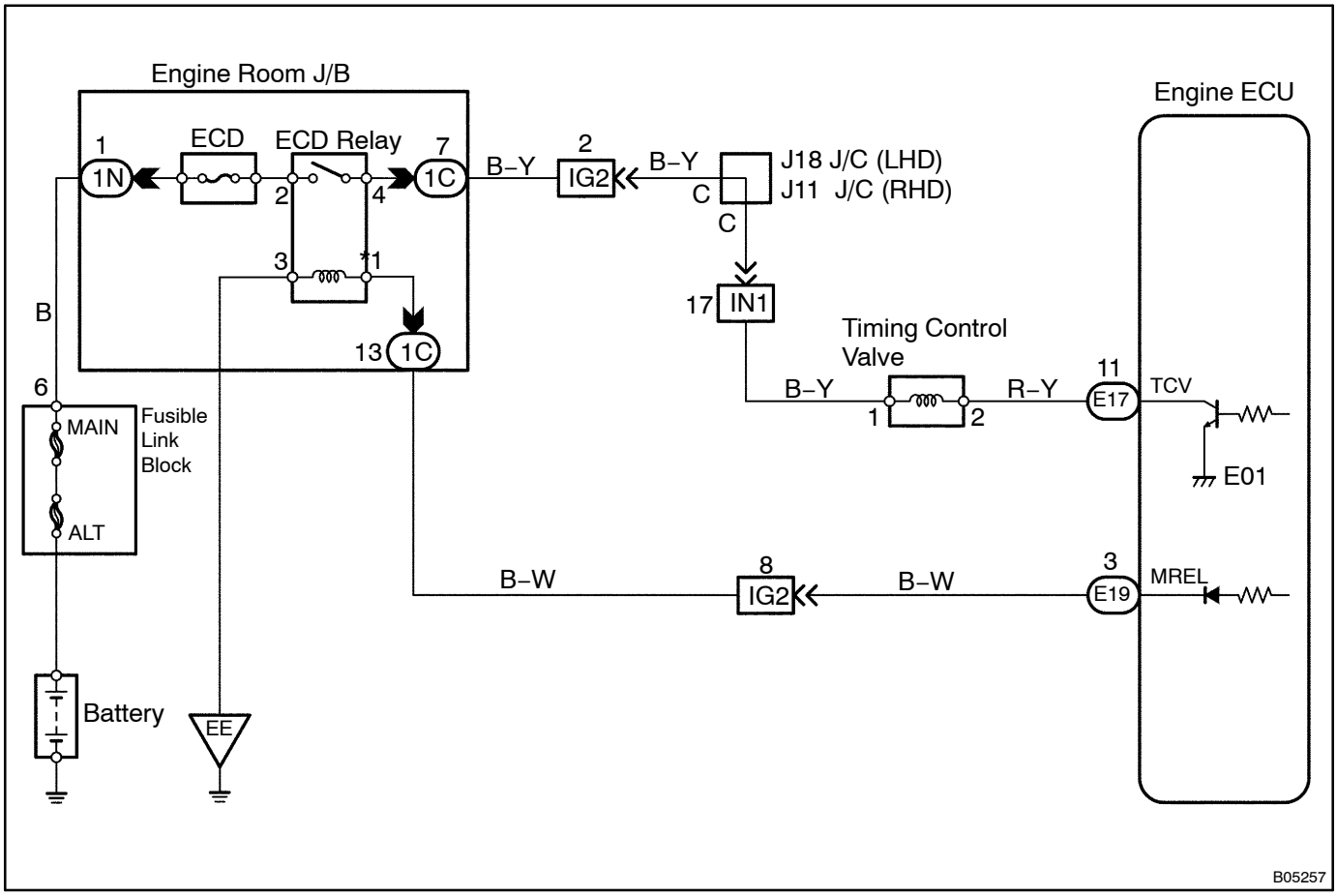

INSPECTION PROCEDURE

1	**Check timing control valve (See page FU–113).**

NG → **Check and replace injection pump (See page FU–113).**

OK

2	**Check voltage between terminal TCV of engine ECU connector and body ground.**

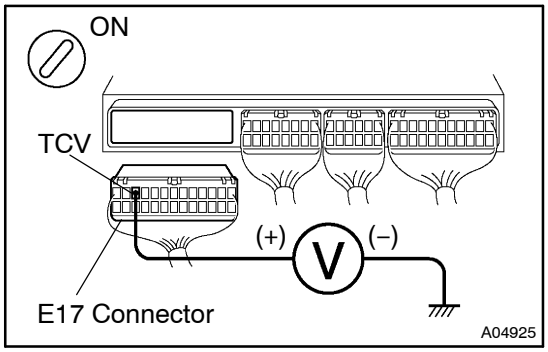

PREPARATION:

(a) Remove the glove compartment door.
(b) Disconnect the ”E17” connector of engine ECU.
(c) Turn the ignition switch ON.

CHECK:

Measure voltage between terminal TCV of engine ECU connector and body ground.

OK:

Voltage: 9 – 14 V

OK → **Go to step 3.**

NG

Check for open or short in harness and connector between timing control valve and engine ECU, timing control valve and ECD main relay (Marking: ECD) (See page IN–19).

3	Check voltage between terminal TCV of engine ECU and body ground.

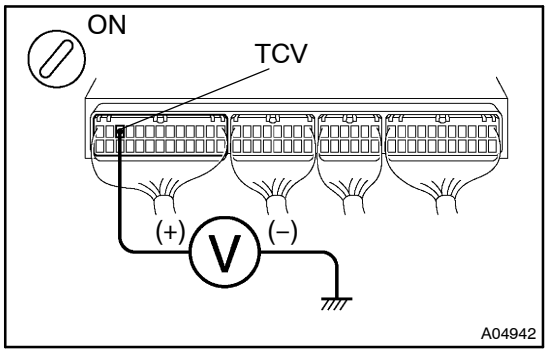

PREPARATION:

(a) Remove the glove compartment door.

(b) Turn the ignition switch ON.

CHECK:

Measure voltage between terminal TCV of engine ECU and body ground.

OK:

Voltage: 9 – 14 V

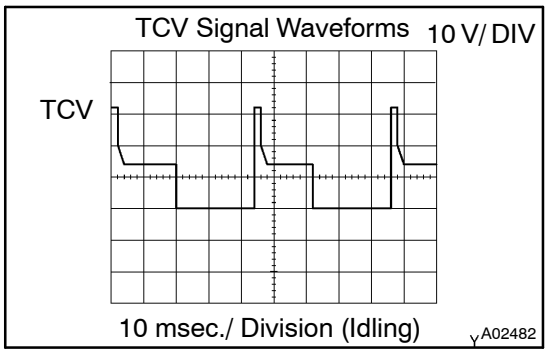

Reference: INSPECTION USING OSCILLOSCOPE

During idling, check waveform between terminals TCV and E1 of engine ECU.

HINT:

The correct waveform is as shown.

NG	Check and replace engine ECU (See page IN–19).

OK

4	Check fuel filter clogging, fuel freezing and fuel air in.

NG	Replace or repair.

OK

Check and replace injection pump (See page FU–113).