DTC	19 (1)	Accelerator Pedal Position Sensor circuit Malfunction (Open /Short)

CIRCUIT DESCRIPTION

The accelerator pedal position sensor is mounted at the accelerator pedal and detects the accelerator pedal opening angle. When the accelerator pedal is fully closed, a voltage of approximately 1.0 V is applied to terminals VA, VAS of the engine ECU. The voltage applied to the terminals VA, VAS of the engine ECU increases in proportion to the opening angle of the accelerator pedal and becomes approximately 3.8 V when the accelerator pedal is fully opened. The engine ECU judges the vehicle driving conditions from these signals input from terminals VA, VAS and uses them as one of the conditions to control the injection volume and diesel throttle valve position. The idle switch is mounted in the accelerator pedal position sensor and sends the IDL signal to the engine ECU when accelerator pedal is fully closed.
This system has 2 way accelerator pedal position sensor and accelerator pedal closed position switch for fail safe.

DTC No.	DTC Detecting Condition	Trouble Area
19 (1)	Open or short in accelerator pedal position sensor circuit for 0.05 sec. or more	• Open or short in accelerator pedal position sensor circuit • Accelerator pedal position sensor • Engine ECU

HINT:
After confirming DTC 19 (1) use the hand–held tester to confirm the accelerator pedal opening percentage and accelerator pedal close position switch condition.

Accelerator pedal opening position expressed as percentage		Trouble area
Accelerator pedal fully closed	Accelerator pedal fully open	
0 %	0 %	VCC line open VA, VAS line open or short
Approx. 100 %	Approx. 100 %	E2C line open

WIRING DIAGRAM

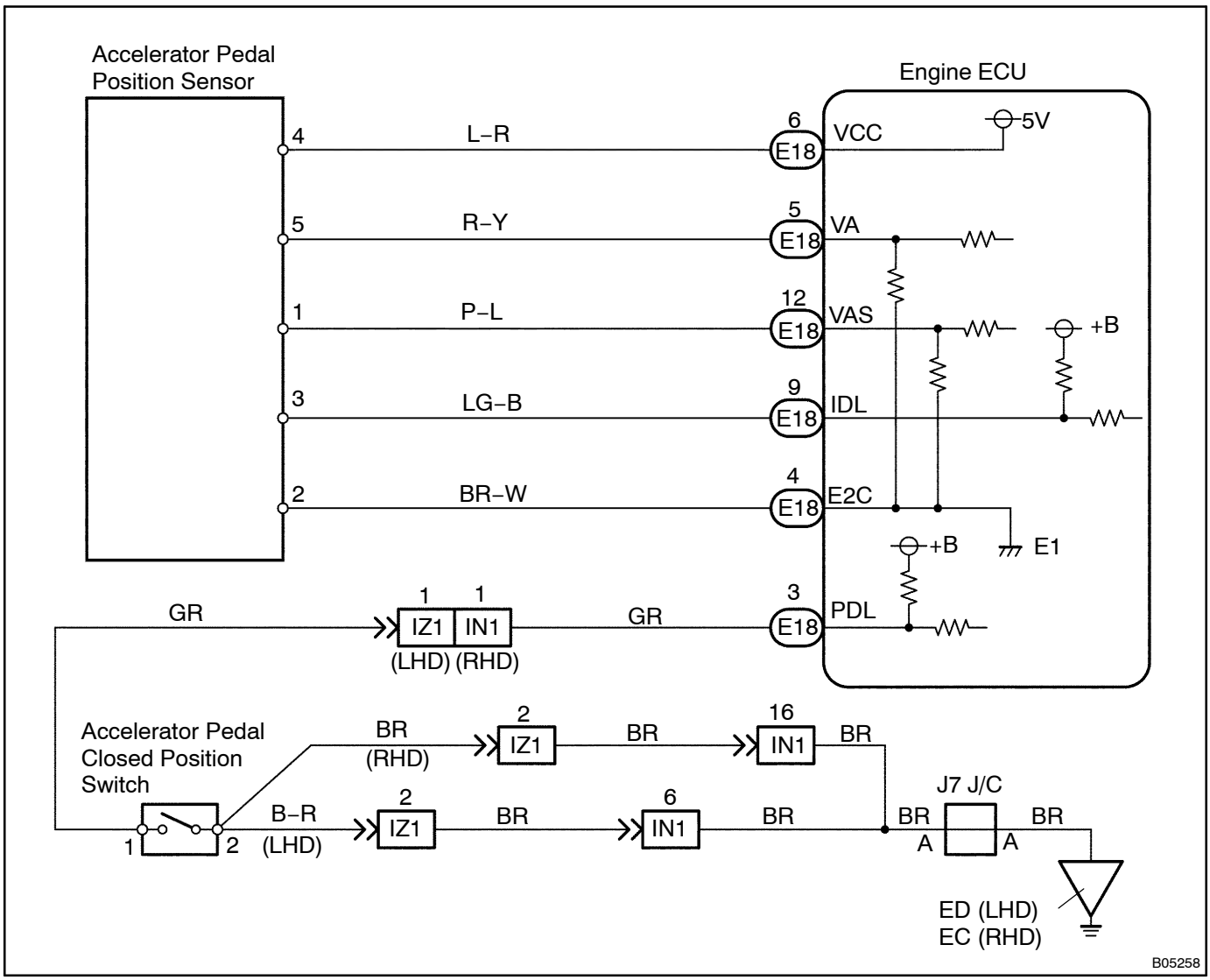

INSPECTION PROCEDURE

When using hand–held tester

1	**Connect the hand–held tester, read the accelerator pedal opening percentage.**

PREPARATION:

(a) Connect the hand–held tester to the DLC3.

(b) Turn the ignition switch ON and push the hand–held tester main switch ON.

CHECK:

Read the accelerator pedal opening percentage.

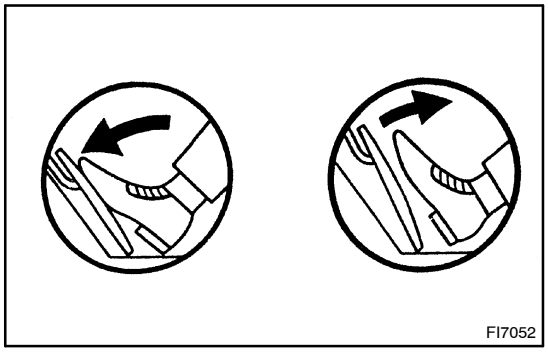

OK:

Accelerator pedal	Accelerator pedal opening position expressed as percentage
Fully open	Approx. 65 %
Fully closed	Approx. 18 %

OK → **Check for intermittent problems (See page DI–4).**

NG

2	**Check voltage between terminal 4 of wire harness side connector and body ground.**

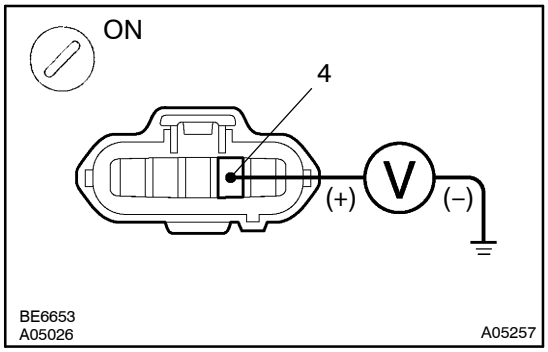

PREPARATION:

(a) Disconnect the accelerator pedal position sensor connector.

(b) Turn the ignition switch ON.

CHECK:

Measure voltage between terminal 4 of wire harness side connector and body ground.

OK:

Voltage: 4.5 – 5.5 V

NG → **Go to step 5.**

OK

3	Check voltage between terminals VA, VAS and E2C of engine ECU.

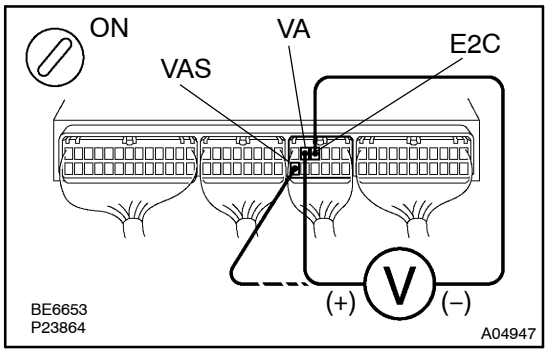

PREPARATION:

(a) Remove the glove compartment door.

(b) Turn the ignition switch ON.

CHECK:

Measure voltage between terminals VA, VAS and E2C of engine ECU.

OK:

Accelerator pedal	Voltage
Fully closed	0.6 – 1.3 V
Fully open	2.8 – 4.5 V

OK → **Check and replace engine ECU (See page IN–19).**

NG

4	Check for open and short in harness and connector between engine ECU and accelerator pedal position sensor (VA, VAS line) (See page IN–19).

NG → **Repair harness or connector.**

OK

Replace accelerator pedal position sensor.

5	Check voltage between terminals VCC and E2C of engine ECU.

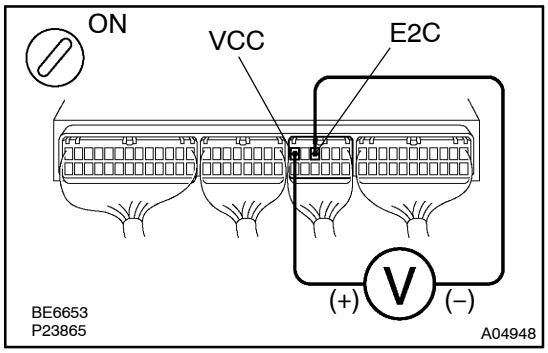

PREPARATION:

(a) Remove the glove compartment door.

(b) Turn the ignition switch ON.

CHECK:

Measure voltage between terminals VCC and E2C of engine ECU connector.

OK:

Voltage: 4.5 – 5.5 V

NG → **Check and replace engine ECU (See page IN–19).**

OK

Check for open in harness and connector between engine ECU and accelerator pedal position sensor (VCC line) (See page IN–19).

When not using hand–held tester

1	Check voltage between terminal 4 of wire harness side connector and body ground.

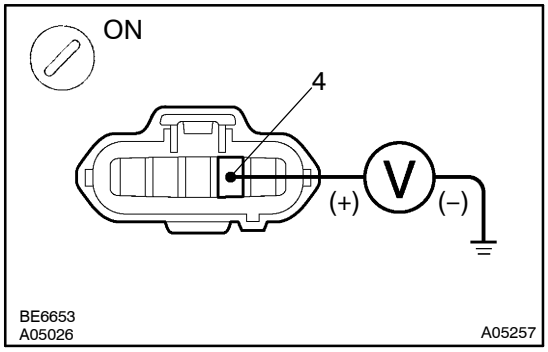

PREPARATION:

(a) Disconnect the accelerator pedal position sensor connector.

(b) Turn the ignition switch ON.

CHECK:

Measure voltage between terminal 4 of wire harness side connector and body ground.

OK:

Voltage: 4.5 – 5.5 V

NG → **Go to step 4.**

OK

2	Check voltage between terminals VA, VAS and E2C of engine ECU.

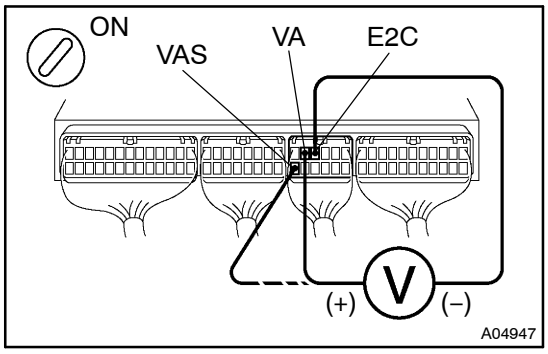

PREPARATION:

(a) Remove the glove compartment door.

(b) Turn the ignition switch ON.

CHECK:

Measure voltage between terminals VA, VAS and E2C of engine ECU.

OK:

Accelerator pedal	Voltage
Fully closed	0.6 – 1.3 V
Fully open	2.8 – 4.5 V

OK → **Check and replace engine ECU (See page IN–19).**

NG

3	Check for open and short in harness and connector between engine ECU and accelerator pedal position sensor (VA, VAS line) (See page IN–19).

NG → **Repair harness or connector.**

OK

Replace accelerator pedal position sensor.

4	Check voltage between terminals VCC and E2C of engine ECU.

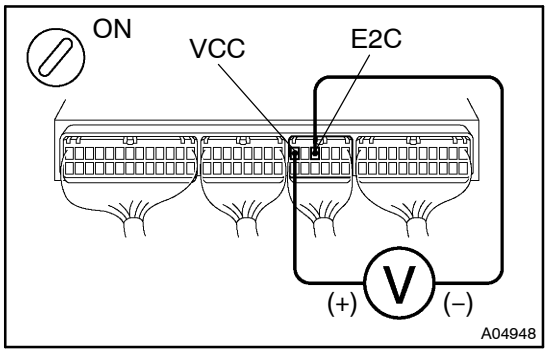

PREPARATION:

(a) Remove the glove compartment door.

(b) Turn ignition switch ON.

CHECK:

Measure voltage between terminals VCC and E2C of engine ECU connector.

OK:

Voltage: 4.5 – 5.5 V

NG → **Check and replace engine ECU (See page IN–19).**

OK

Check for open in harness and connector between engine ECU and accelerator pedal position sensor (VCC line) (See page IN–19).