DTC	19 (2)	Accelerator Pedal Position Sensor Circuit Malfunction (IDL Switch/Range Malfunction)

CIRCUIT DESCRIPTION

Refer to DTC 19 (1) (Accelerator Pedal Position Sensor Circuit Malfunction (Open/Short)) on page DI–27.

DTC No.	DTC Detecting Condition	Trouble Area
19(2)	Condition (a) or (b) continue 0.5 sec. or more: (a) IDL ON and VA > 1.4 V (b) IDL ON and VAS >1.4 V	• Open or short in accelerator pedal position sensor circuit • Accelerator pedal position sensor • Engine ECU
	Condition (a) or (b) continue 0.5 sec. or more: (a) IDL OFF and VA < 0.6 V (b) IDL OFF and VAS < 0.6 V	
	Conditions (a) and (b) continue 0.05 sec. or more: (a) 0.6 V < VA < 4.4 V and 0.6 V < VAS < 4.4 V (b) VA – VAS > 0.5 V	

WIRING DIAGRAM

Refer to DTC 19 (1) (Accelerator Pedal Position Sensor Circuit Malfunction (Open/Short)) on page DI–27.

INSPECTION PROCEDURE

When using hand–held tester

1	Connect the hand–held tester, read the IDL signal.

PREPARATION:

(a) Connect the hand–held tester to the DLC3.

(b) Turn the ignition switch ON and push the hand–held tester main switch ON.

CHECK:

Read the IDL signal.

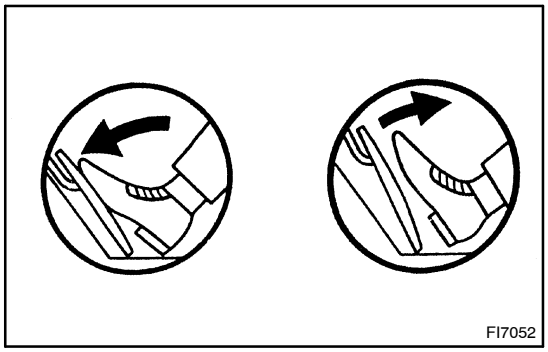

OK:

Accelerator pedal	IDL signal
Fully open	OFF
Fully closed	ON

OK → Go to step 4.

NG

2	**Check voltage between terminals IDL and E2C of engine ECU.**

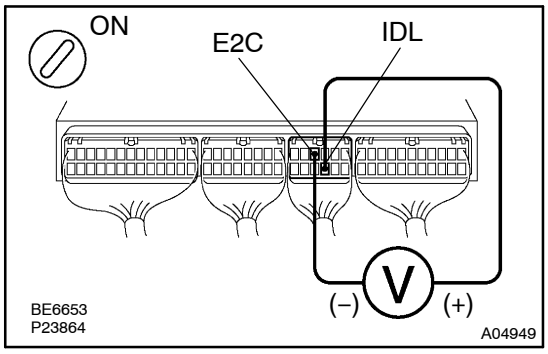

PREPARATION:

(a) Remove the glove compartment door.

(b) Turn the ignition switch ON.

CHECK:

Measure voltage between terminals IDL and E2C of engine ECU.

OK:

Accelerator pedal	Voltage
Fully closed	9 – 14 V
Fully open	0 – 3 V

OK → **Check and replace engine ECU (See page IN–19).**

NG

3	**Check for open and short in harness and connector between engine ECU and accelerator pedal position sensor (IDL line) (See page IN–19).**

NG → **Repair harness or connector.**

OK

Replace accelerator pedal position sensor.

4	**Connect the hand–held tester, read the accelerator pedal operating percentage (See page DI–27 , Step 1).**

OK → **Check for intermittent problems (See page DI–4).**

OK

5	Check voltage between terminal VCC of wire harness side connector and body ground (See page DI–27, Step 2).

NG → Go to step 8.

OK

6	Check voltage between terminals VA, VAS and E2C of engine ECU (See page DI–27, Step 3).

OK → Check and replace engine ECU (See page IN–19).

NG

7	Check for open and short in harness and connector between engine ECU and accelerator pedal position sensor (VA, VAS line) (See page IN–19).

NG → Repair harness or connector.

OK

Replace accelerator pedal position sensor.

8	Check voltage between terminals VCC and E2C of engine ECU (See page DI–27, Step 5).

NG → Check and replace engine ECU (See page IN–19).

OK

Check for open in harness and connecter between engine ECU and accelerator pedal position sensor (VCC line) (See page IN–19).

When not using hand–held tester

1	**Check voltage between terminals IDL and E2C of engine ECU.**

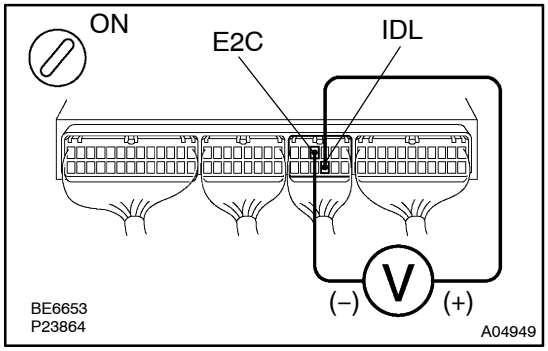

PREPARATION:

(a) Remove the glove compartment door.

(b) Turn the ignition switch ON.

CHECK:

Measure voltage between terminals IDL and E2C of engine ECU.

OK:

Accelerator pedal	Voltage
Fully closed	9 – 14 V
Fully open	0 – 3 V

OK → **Go to step 3.**

NG

2	**Check for open and short in harness and connector between engine ECU and accelerator pedal position sensor (IDL line) (See page IN–19).**

NG → **Repair harness or connector.**

OK

Replace accelerator pedal position sensor.

3	**Check voltage between terminal 4 of wire harness side connector and body-ground (See page DI–27, Step 2).**

NG → **Go to step 6.**

OK

4	Check voltage between terminals VA, VAS and E2C of engine ECU (See page DI–27, Step 3).

OK → Check and replace engine ECU (See page IN–19).

NG

5	Check for open and short in harness and connector between engine ECU and accelerator pedal position sensor (VA, VAS line) (See page IN–19).

NG → Repair harness or connector.

OK

Replace accelerator pedal position sensor.

6	Check voltage between terminals VCC and E2C of engine ECU (See page DI–27, Step 5).

NG → Check and replace engine ECU (See page IN–19).

OK

Check for open in harness and connector between engine ECU and accelerator pedal position sensor (VCC line) (See page IN–19).