DI3S7–01

DTC	22	Water Temp. Sensor Circuit Malfunction

CIRCUIT DESCRIPTION

(Fig.1)

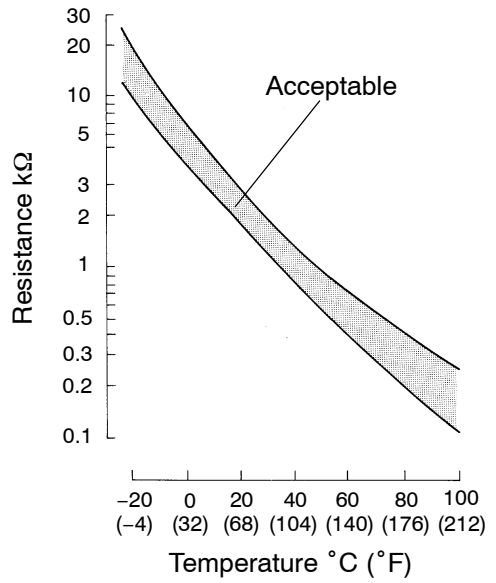

The water temperature sensor senses the coolant temperature. A thermistor built into the sensor changes the resistance value according to the coolant temperature. The lower the coolant temperature, the greater the thermistor resistance value, and the higher the coolant temperature, the lower the thermistor resistance value (See Fig.1).

The water temperature sensor is connected to the engine ECU (See below). The 5 V power source voltage in the engine ECU is applied to the water temperature sensor from the terminal THW via a resistor R. That is, the resistor R and the water temperature sensor are connected in series. When the resistance value of the water temperature sensor changes in accordance with changes in the coolant temperature, the potential at the terminal THW also changes. Based on this signal, the engine ECU increases the fuel injection volume to improve driveability during cold engine operation.

DTC No.	DTC Detecting Condition	Trouble Area
22	Open or short in water temp. sensor circuit for 0.5 sec. or more	• Open or short in water temp. sensor circuit • Water temp. sensor • Engine ECU

HINT:

After confirming DTC22 use the hand–held tester to confirm the water temperature from,"CURRENT DATA".

Temperature displayed	Malfunction
–40°C (–40°F)	Open circuit
140°C (284°F) or more	Short circuit

WIRING DIAGRAM

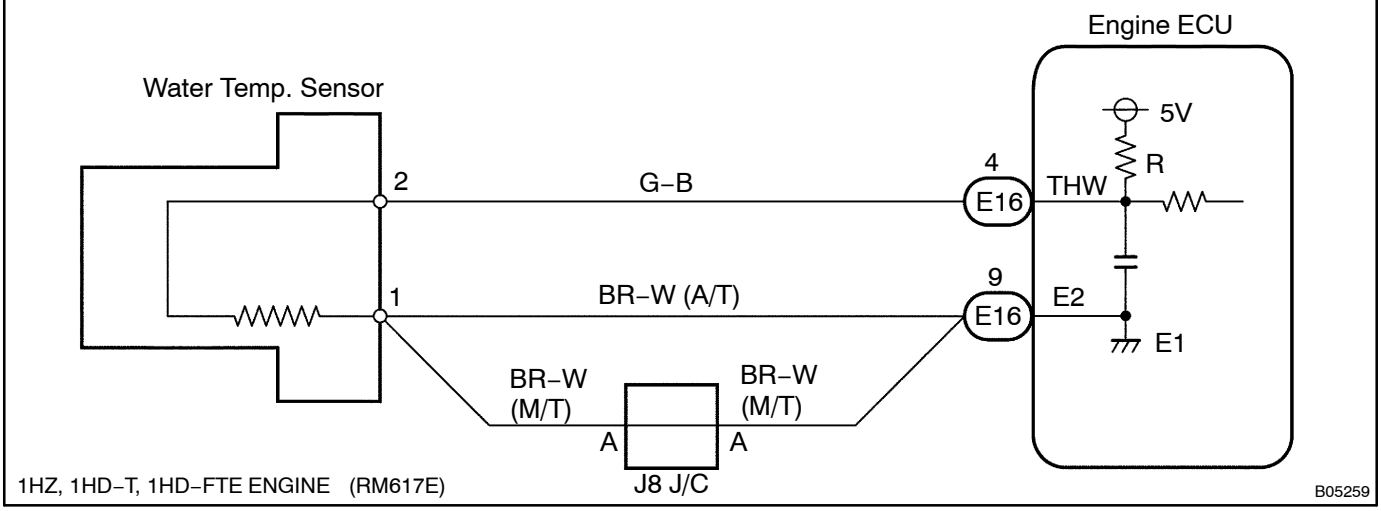

INSPECTION PROCEDURE

HINT:
If DTC ”22” (Water Temp. Sensor Circuit Malfunction), ”24” (Intake Air Temp. Sensor Circuit Malfunction) and ”39” (Fuel Temp. Sensor Circuit Malfunction) are output simultaneously, E2 (sensor ground) may be open.

When using hand–held tester

1	**Connect the hand–held tester, and read value of water temperature.**

PREPARATION:
(a) Connect the hand–held tester to the DLC 3.
(b) Turn the ignition switch ON and push the hand–held tester main switch ON.
CHECK:
Read temperature value on the hand–held tester.
OK:
Same as actual water temperature.
HINT:
- If there is open circuit, hand–held tester indicates –40°C (–40°F).
- If there is short circuit, hand–held tester indicates 140°C (284°F) or more.

NG → **–40°C (–40°F) ... Go to step 2.**
140°C (284°F) or more ... Go to step 4.

OK

Check for intermittent problems (See page DI–4).

2	Check for open in harness or engine ECU.

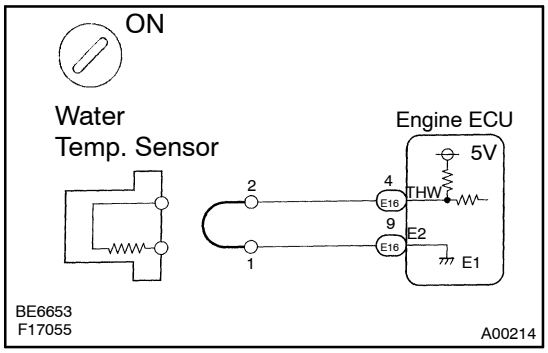

PREPARATION:

(a) Disconnect the water temp. sensor connector.
(b) Connect sensor wire harness terminals together.
(c) Turn the ignition switch ON.

CHECK:

Read temperature value on the hand–held tester.

OK:

Temperature value: 140°C (284°F) or more

OK	Confirm good connection at sensor. If OK, replace water temp. sensor.

NG

3	Check for open in harness or engine ECU.

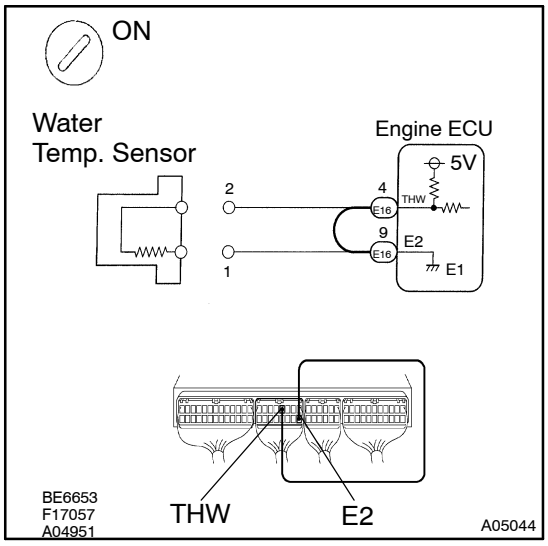

PREPARATION:

(a) Remove the glove compartment door.
(b) Connect between terminals THW and E2 of engine ECU connector.

HINT:

Water temp. sensor connector is disconnected.

Before checking, do a visual and contact pressure check for the engine ECU connector (See page IN–19).

(c) Turn the ignition switch ON.

CHECK:

Read temperature value on the hand–held tester.

OK:

Temperature value: 140°C (284°F) or more

OK	Open in harness between terminal E2 or THW, repair or replace harness.

NG

Confirm good connection at engine ECU. If OK, replace engine ECU.

4	Check for short in harness and engine ECU.

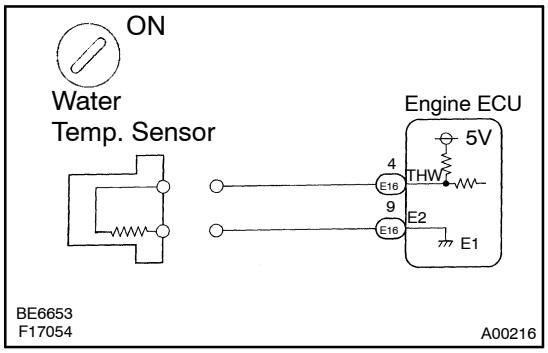

PREPARATION:

(a) Disconnect the water temp. sensor connector.

(b) Turn the ignition switch ON.

CHECK:

Read temperature value on the hand–held tester.

OK:

Temperature value: –40°C (–40°F)

OK	Replace water temp. sensor.

NG

5	Check for short in harness or engine ECU.

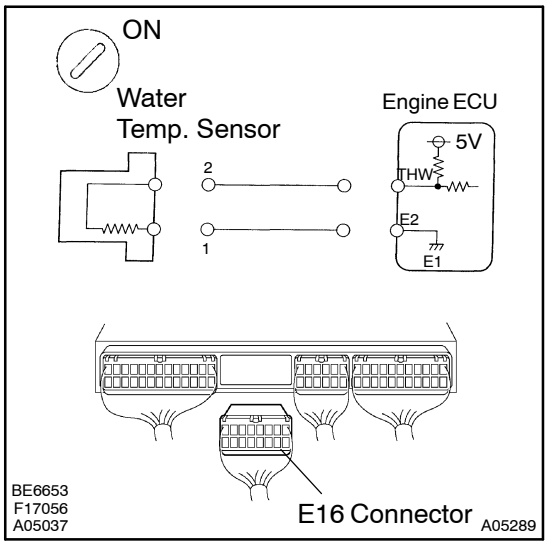

PREPARATION:

(a) Remove the glove compartment door.

(b) Disconnect the "E16" connector of engine ECU.

HINT:

Water temp. sensor connector is disconnected.

(c) Turn the ignition switch ON.

CHECK:

Read temperature value on the hand–held tester.

OK:

Temperature value: –40°C (–40°F)

OK	Repair or replace harness or connector.

NG

Check and replace engine ECU (See page IN–19).

When not using hand–held tester

1	**Check voltage between terminals THW and E2 engine ECU connector.**

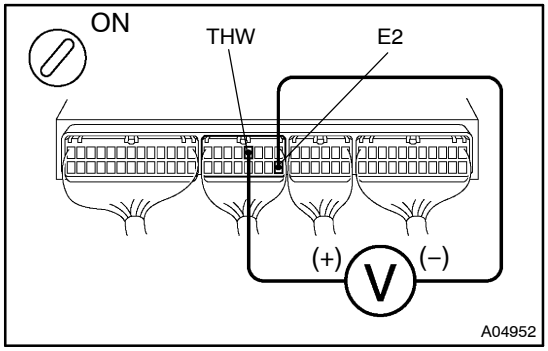

PREPARATION:

(a) Remove the glove compartment door.

(b) Turn the ignition switch ON.

CHECK:

Measure voltage between terminals THW and E2 of engine ECU connector.

OK:

Water temp. °C (°F)	Voltage
20 (68) (Engine is cool)	0.2 – 3.8 V
80 (176) (Engine is hot)	0.1 – 1.5 V

OK	**Check for intermittent problems (See page DI–4).**

NG

2	**Check water temp. sensor (See page ED–5).**

NG	**Replace water temp. sensor.**

OK

3	**Check for open and short in harness and connector between engine ECU and water temp. sensor (See page IN–19).**

NG	**Repair or replace harness or connector.**

OK

Check and replace engine ECU (See page IN–19).