DI3S8–01

DTC	24	Intake Air Temp. Sensor Circuit Malfunction

CIRCUIT DESCRIPTION

(Fig.1)

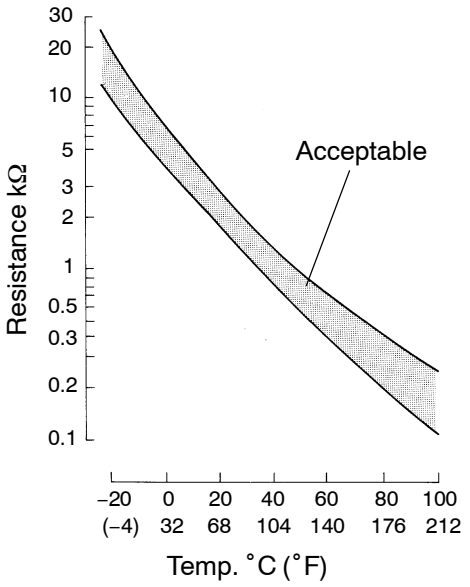

The intake air temp. sensor is built into the intake manifold and senses the intake air temperature. A thermistor built in the sensor changes the resistance value according to the intake air temperature. The lower the intake air temperature, the greater the thermistor, the lower the thermistor resistance value (See Fig.1).The intake air temperature sensor is connected to the engine ECU. The 5 V power source voltage in the engine ECU is applied to the intake air temperature sensor from the terminal THA via a resistor R. That is the resistor R and the intake air temperature sensor are connected in series. When the resistance value of the intake air temperature sensor changes. Based on this signal, the engine ECU increases the fuel injection volume to improve drivability during cold engine operation.

DTC No.	DTC Detecting Condition	Trouble Area
24	Open or short in intake air temp. sensor circuit for 0.5 sec. or more	• Open or short in intake air temp. sensor circuit • Intake air temp. sensor • Engine ECU

HINT:

After confirming DTC 24 use the hand–held tester to confirm the water temperature from ”CURRENT DATA”.

Temperature displayed	Malfunction
–40°C (–40°F)	Open circuit
140°C (284°F) or more	Short circuit

WIRING DIAGRAM

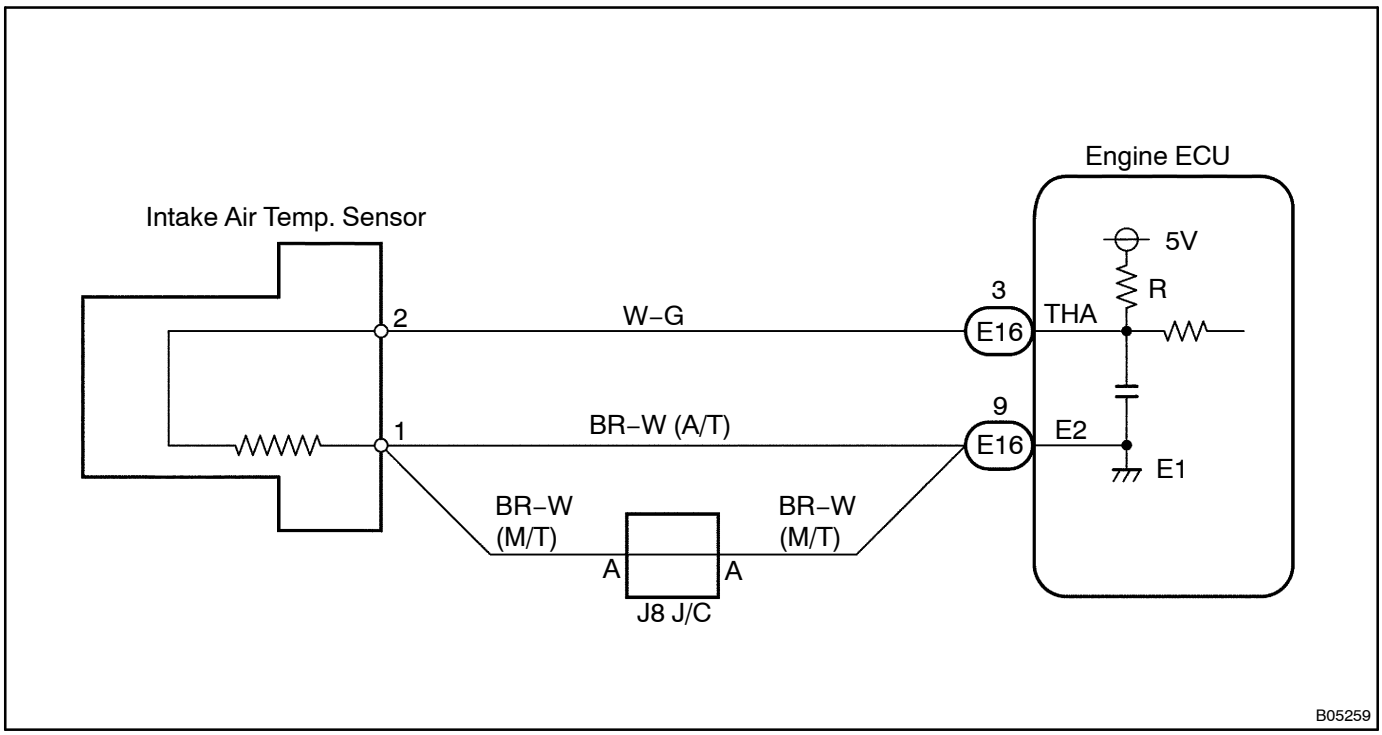

INSPECTION PROCEDURE

HINT:

If DTC”22” (Water Temp. Sensor Circuit Malfunction), ”24” (Intake Air Temp. Sensor Circuit Malfunction), ”35” (Turbo Pressure Sensor Circuit Malfunction) and ”39” (Fuel Temp. Sensor Circuit Malfunction) are output simultaneously, E2 (sensor ground) may be open.

When using hand–held tester

1	**Connect the hand–held tester, and read value of water temperature.**

PREPARATION:

(a) Connect the hand–held tester to the DLC3.

(b) Turn the ignition switch ON and push the hand–held tester main switch ON.

CHECK:

Read temperature value on the hand–held tester.

OK:

Same as actual intake air temperature.

HINT:

- If there is open circuit, hand–held tester indicates –40°C (–40°F).
- If there is short circuit, hand–held tester indicates 140°C (284°F) or more.

NG → **–40°C (–40°F) ... Go to step 2.**
140°C (284°F) or more ... Go to step 4.

OK

Check for intermittent problems (See page DI–4).

2	**Check for open in harness or engine ECU.**

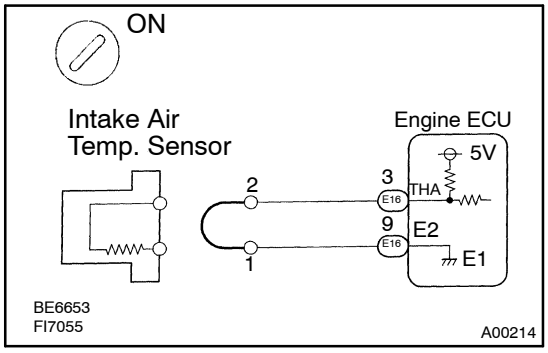

PREPARATION:

(a) Disconnect the intake air temp. sensor connector.

(b) Connect sensor wire harness terminals together.

(c) Turn the ignition switch ON.

CHECK:

Read temperature value on the hand–held tester.

OK:

Temperature value: 140°C (284°F) or more

OK → **Confirm good connection at sensor.**
If OK, replace intake air temp. sensor.

NG

3	Check for open in harness or engine ECU.

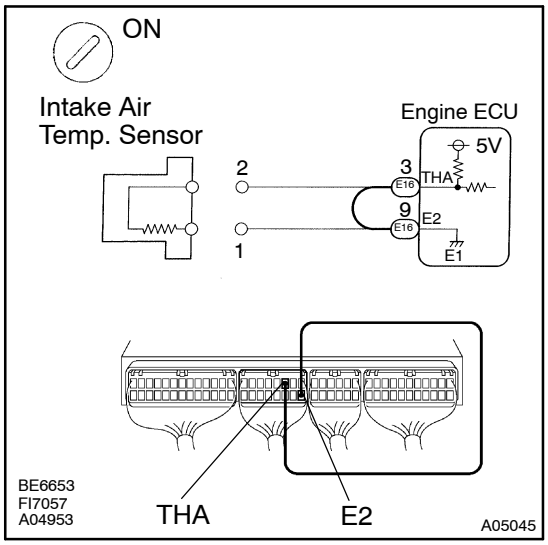

PREPARATION:

(a) Remove the glove compartment door.

(b) Connect between terminals THA and E2 of engine ECU connector.

HINT:

Intake air temp. sensor connector is disconnected.

Before checking, do a visual and contact pressure check for the engine ECU connector (See page IN–19).

(c) Turn the ignition switch ON.

CHECK:

Read temperature value on the hand–held tester.

OK:

Temperature value: 140°C (284°F) or more

OK	Open in harness between terminal E2 or THA, repair or replace harness.

NG

Confirm good connection at engine ECU. If OK, replace engine ECU.

4	Check for short in harness and engine ECU.

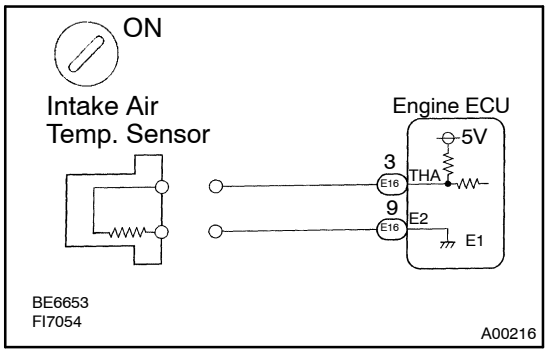

PREPARATION:

(a) Disconnect the intake air temp. sensor connector.

(b) Turn the ignition switch ON.

CHECK:

Read temperature value on the hand–held tester.

OK:

Temperature value: –40°C (–40°F)

OK	Replace intake air temp. sensor.

NG

5	Check for short in harness or engine ECU.

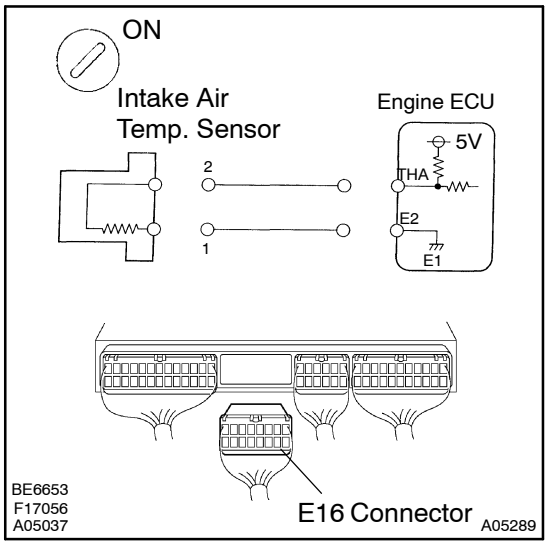

PREPARATION:

(a) Remove the glove compartment door.

(b) Disconnect the ”E16” connector of engine ECU.

HINT:

Intake air temp. sensor connector is disconnected.

(c) Turn the ignition switch ON.

CHECK:

Read temperature value on the hand–held tester.

OK:

Temperature value: –40°C (–40°F)

OK	Repair or replace harness or connector.

NG

Check and replace engine ECU (See page IN–19).

When not using hand–held tester

1	**Check voltage between terminals THA and E2 engine ECU connector.**

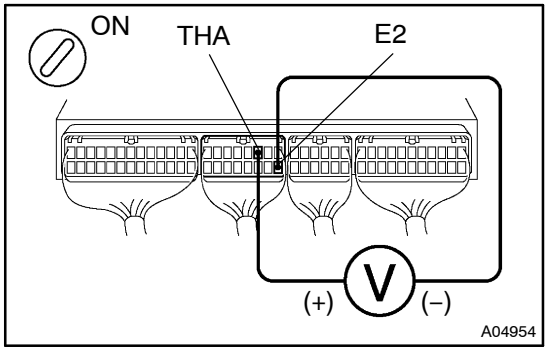

PREPARATION:

(a) Remove the glove compartment door.

(b) Turn the ignition switch ON.

CHECK:

Measure voltage between terminals THA and E2 of engine ECU connector.

OK:

Intake air temp. °C (°F)	Voltage
20 (68) (Engine is cool)	0.2 – 3.8 V
80 (176) (Engine is hot)	0.1 – 1.5 V

OK → **Check for intermittent problems (See page DI–4).**

NG

2	**Check intake air temp. sensor (See page ED–7).**

NG → **Replace intake air temp. sensor.**

OK

3	**Check for open and short in harness and connector between engine ECU and intake air temp. sensor (See page IN–19).**

NG → **Repair or replace harness or connector.**

OK

Check and replace engine ECU (See page IN–19).