DI31Y–02

DTC	33	Intake Shutter Control Circuit Malfunction

CIRCUIT DESCRIPTION

When the ignition switch turned OFF, the intake shutter control system shuts off the air intake by closing the intake shutter for the engine stopping smoothly. The actuator shuts the intake shutter by the engine ECU controlling the VSV.

DTC No.	DTC Detecting Condition	Trouble Area
33	Open or short in VSV for intake shutter circuit for 0.5 sec. or more	• Open or short in VSV for intake shutter circuit • VSV for intake shutter • Intake shutter • Vacuum hose disconnected or blocked • Engine ECU

WIRING DIAGRAM

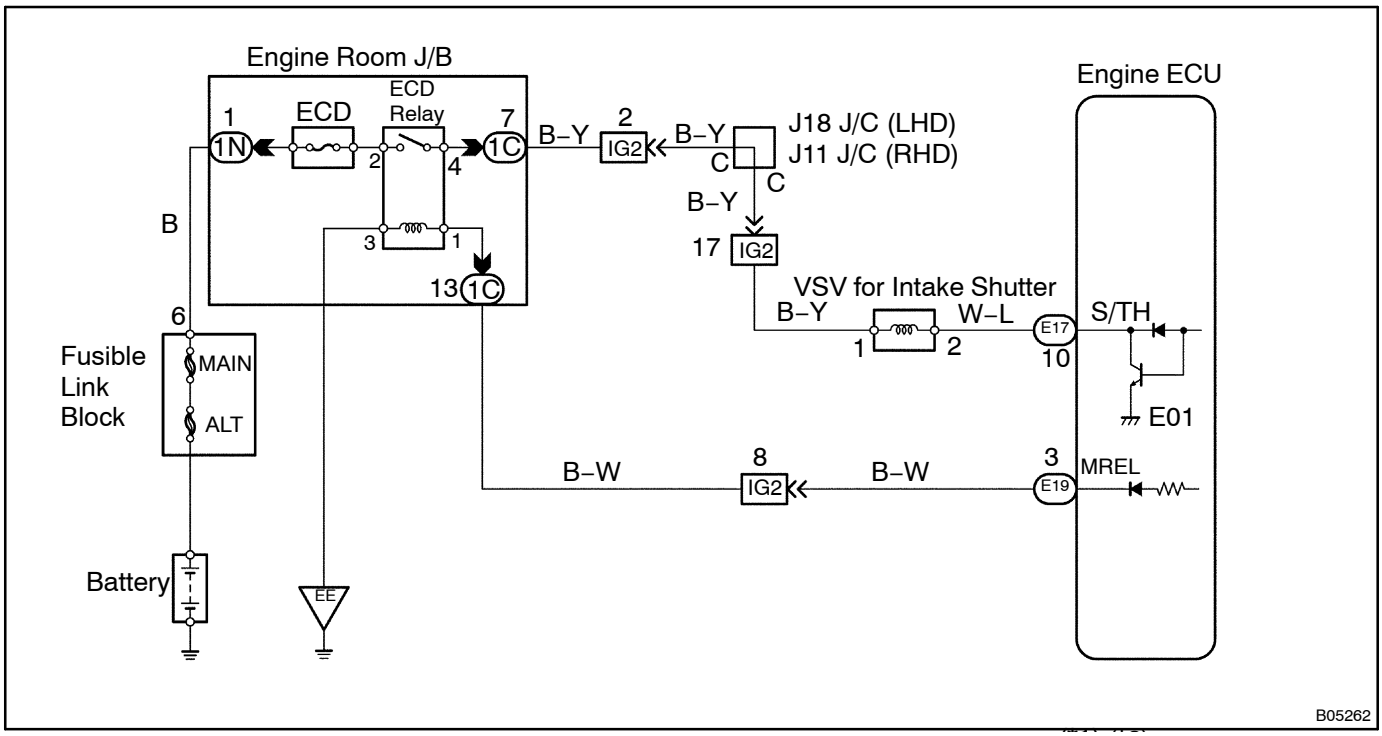

INSPECTION PROCEDURE

1	**Check resistance of VSV for intake shutter (See page EM–20).**

NG → **Replace the VSV for intake shutter.**

OK

2	Check the VSV for intake shutter.

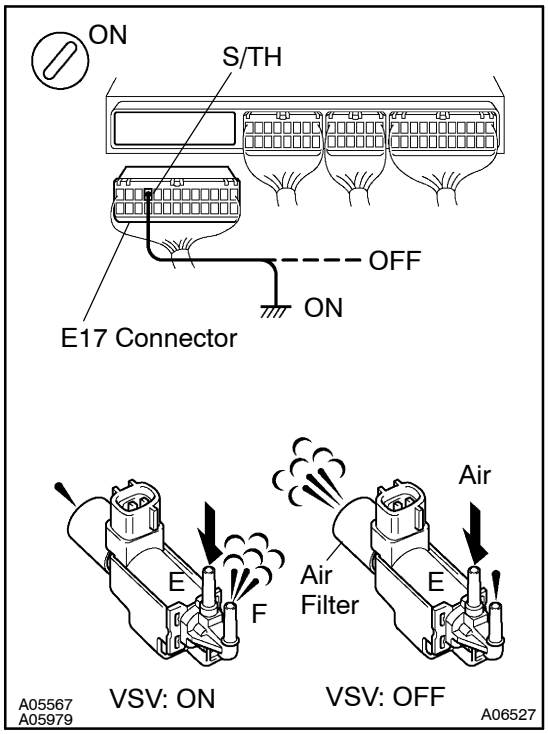

PREPARATION:

(a) Remove the glove compartment door.
(b) Disconnect the "E17" connector of engine ECU.
(c) Turn the ignition switch ON.

CHECK:

Check VSV function

(a) Connect between terminal S/TH of engine ECU and body ground (VSV is ON).
(b) Disconnect between terminal S/TH of engine ECU and body ground (VSV is OFF).

OK:

VSV is ON:
Air from pipe E flows out through pipe F.
VSV is OFF:
Air from pipe E flows out through the air filter.

OK	Check and replace engine ECU (See page IN–19).

NG

3	Check for open and short in harness and connector between engine ECU and VSV for intake shutter, VSV for intake shutter and ECD main relay (Marking: ECD) (See page IN–19).

NG	Repair harness or connector.

OK

Replace VSV for intake shutter.