DI31Z–02

DTC	35	Turbo Pressure Sensor Circuit Malfunction

CIRCUIT DESCRIPTION

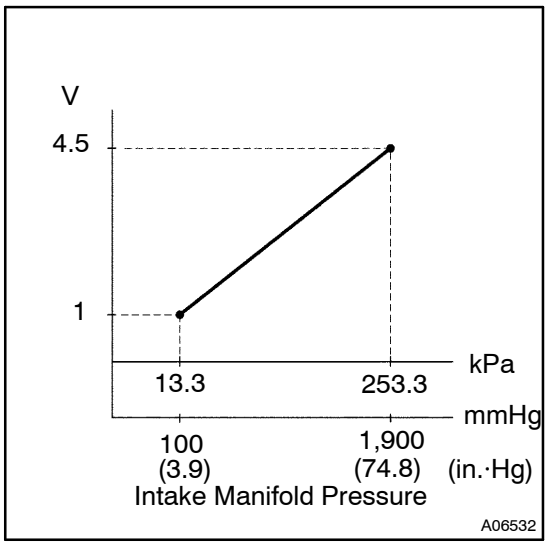

The turbo pressure sensor is connected to the intake manifold. The engine ECU detects the intake manifold pressure as a voltage by the sensor. The engine ECU uses the intake manifold pressure signal for correction of injection volume control and injection timing control.
The VSV for turbo pressure sensor switches the atmosphere applied to the turbo pressure sensor to the intake manifold pressure. The turbo pressure sensor monitors both the atmospheric pressure and intake manifold pressure and transmits the output voltage to the engine ECU, and the engine ECU uses this atmospheric pressure value for correcting the injection volume.

DTC No.	DTC Detecting Condition	Trouble Area
35	Open or short in turbo pressure sensor circuit for 2 sec. or more	• Open or short in turbo pressure sensor circuit • Turbo pressure sensor • Open or short in VSV for turbo pressure sensor circuit • VSV for turbo pressure sensor • Vacuum hose disconnected or blocked • Engine ECU

HINT:
After confirming DTC 35, use the hand–held tester to confirm the intake manifold pressure from ”CURRENT DATA”.

Intake manifold pressure (kPa)	Malfunction
Approx. 0	• PIM circuit short
130 or more	• VC circuit open or short • PIM circuit open • E2 circuit open

WIRING DIAGRAM

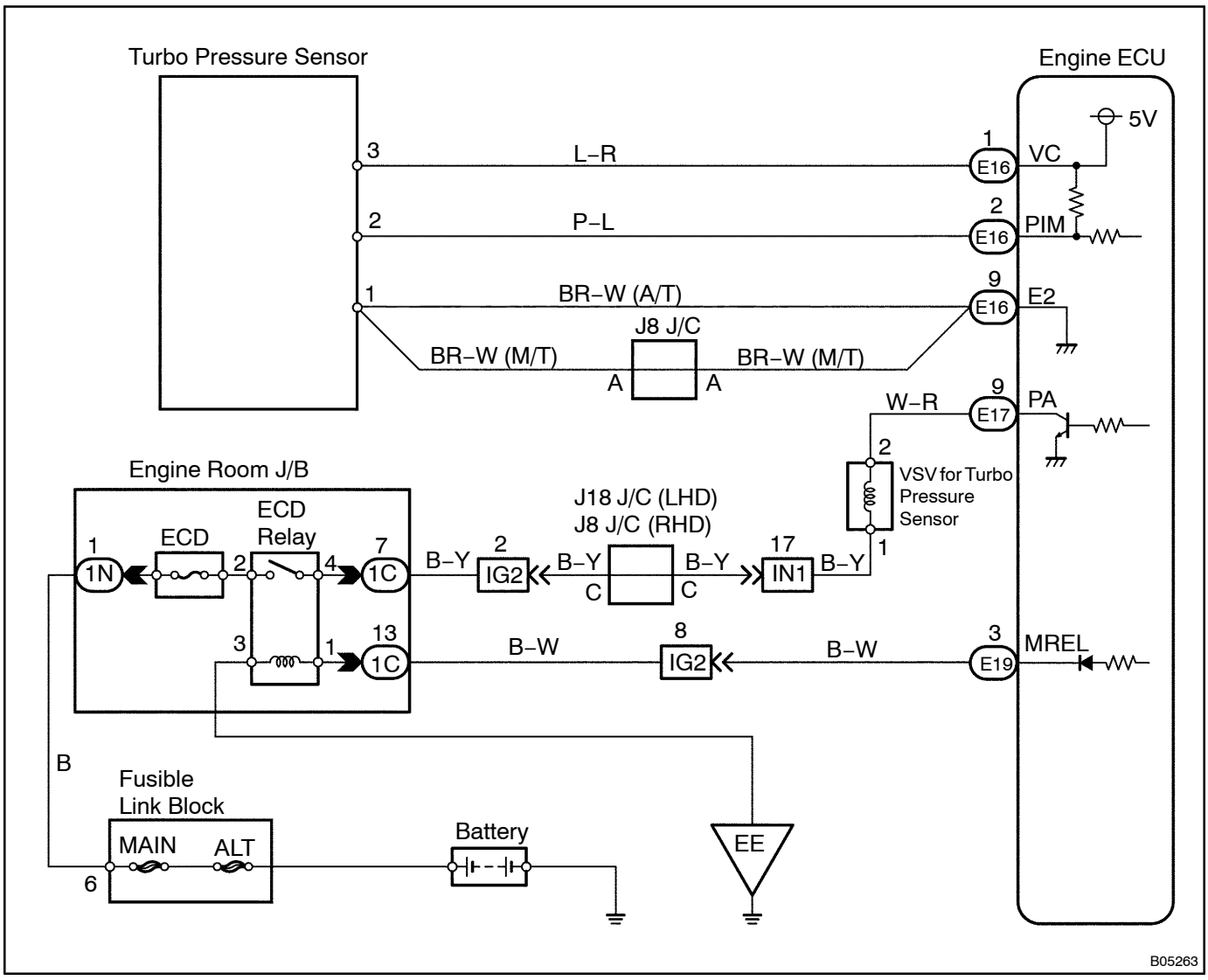

INSPECTION PROCEDURE

HINT:

If DTC ”22” (Water Temp. Sensor Circuit Malfunction), ”24” (Intake Air Temp, Sensor Circuit Malfunction), ”35” (Turbo Pressure Sensor Circuit Malfunction) and ”39” (Fuel Temp. Sensor Circuit Malfunction) are output simultaneously, E2 (sensor ground) may be open.

When using hand–held tester

1	**Connect the hand–held tester, and read value of intake manifold pressure.**

PREPARATION:

(a) Connect the hand–held tester to the DLC3.

(b) Turn the ignition switch ON and push the hand–held tester main switch ON.

CHECK:

Read value of intake manifold pressure on the hand–held tester.

OK:

Same as atmospheric pressure.

OK → **Go to step 5.**

NG

2	**Check turbo pressure sensor (See page TC–17).**

NG → **Replace turbo pressure sensor.**

OK

3	**Check voltage between terminals VC and E2 of engine ECU.**

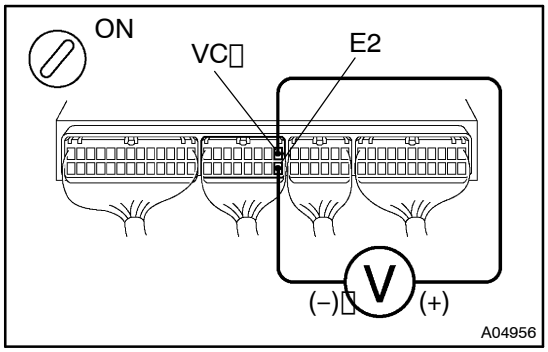

PREPARATION:

(a) Remove the glove compartment door.

(b) Turn the ignition switch ON.

CHECK:

Measure voltage between terminals VC and E2 of engine ECU.

OK:

Voltage: 4.5 – 5.5 V

NG → **Check and replace engine ECU (See page IN–19).**

OK

4	Check voltage between terminals PIM and E2 of engine ECU.

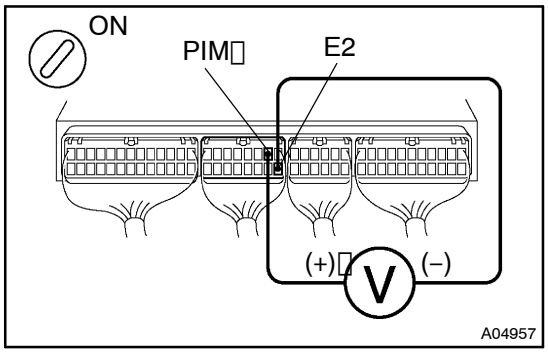

PREPARATION:

(a) Remove the glove compartment door.

(b) Turn the ignition switch ON.

CHECK:

Measure voltage between terminals PIM and E2 of engine ECU.

OK:

Voltage: 1.7 – 2.9 V

OK	Check and replace engine ECU (See page IN–19).

NG

Check for open and short in harness and connector between engine ECU and turbo pressure sensor (See page IN–19).

5	Check the connection of vacuum hose between turbo pressure sensor and VSV for turbo pressure sensor, VSV for turbo pressure sensor and intake manifold.

NG	Repair or replace.

OK

6	Check resistance of VSV for turbo pressure sensor (See page TC–19).

NG	Replace VSV for turbo pressure sensor.

OK

7	Check the VSV for turbo pressure sensor.

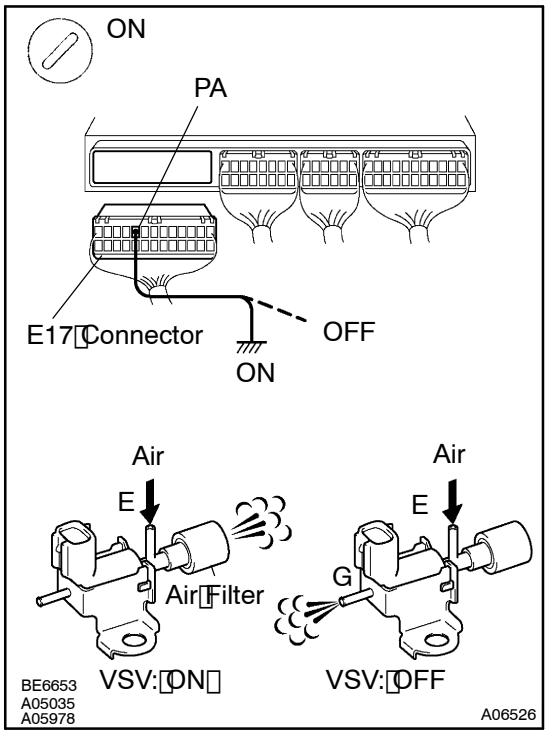

PREPARATION:

(a) Remove the glove compartment door.
(b) Disconnect the "E17" connector of engine ECU.
(c) Turn the ignition switch ON.

CHECK:

Check VSV function

(a) Connect between terminal PA of engine ECU and body ground (VSV is ON).
(b) Disconnect between terminal PA of engine ECU and body ground (VSV is OFF).

OK:

VSV is ON:
Air from pipe E flows out through the air filter.
VSV is OFF:
Air from pipe E flows out through pipe G.

OK	Check and replace engine ECU (See page IN–19).

NG

8	Check for open and short in harness and connector between engine ECU and VSV for turbo pressure sensor, VSV for turbo pressure sensor and ECD main relay (Marking: ECD) (See page IN–19).

NG	Repair harness or connector.

OK

Replace VSV for turbo pressure sensor.

When not using hand–held tester

1	**Check turbo pressure sensor (See page TC–17).**

NG → **Replace turbo pressure sensor.**

OK

2	**Check voltage between terminals VC and E2 of engine ECU.**

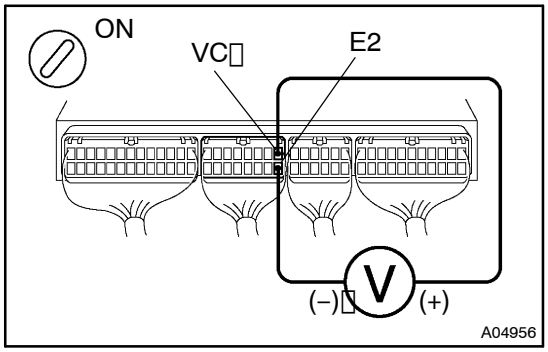

PREPARATION:
(a) Remove the glove compartment door.
(b) Turn the ignition switch ON.
CHECK:
Measure voltage between terminals VC and E2 of engine ECU.
OK:
Voltage: 4.5 – 5.5 V

NG → **Check and replace engine ECU (See page IN–19).**

OK

3	**Check voltage between terminals PIM and E2 of engine ECU.**

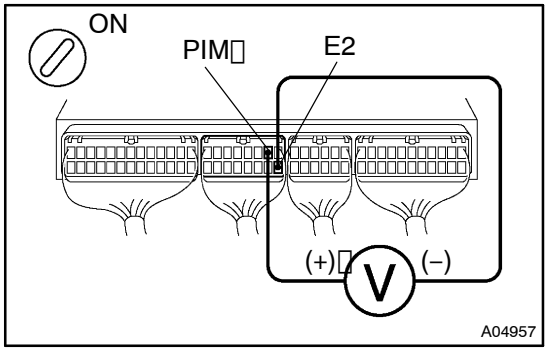

PREPARATION:
(a) Remove the glove compartment door.
(b) Turn the ignition switch ON.
CHECK:
Measure voltage between terminals PIM and E2 of engine ECU.
OK:
Voltage: 1.7 – 2.9 V

OK → **Check and replace engine ECU (See page IN–19).**

NG

4	Check for open and short in harness and connector between engine ECU and turbo pressure sensor (See page IN–19).

NG → Repair or replace harness or connector.

OK

5	Check the connection of vacuum hose between turbo pressure sensor and VSV for turbo pressure sensor, VSV for turbo pressure sensor and intake manifold.

NG → Repair or replace.

OK

6	Check resistance of VSV for turbo pressure sensor (See page TC–19).

NG → Replace VSV for turbo pressure sensor.

OK

7	Check the VSV for turbo pressure sensor.

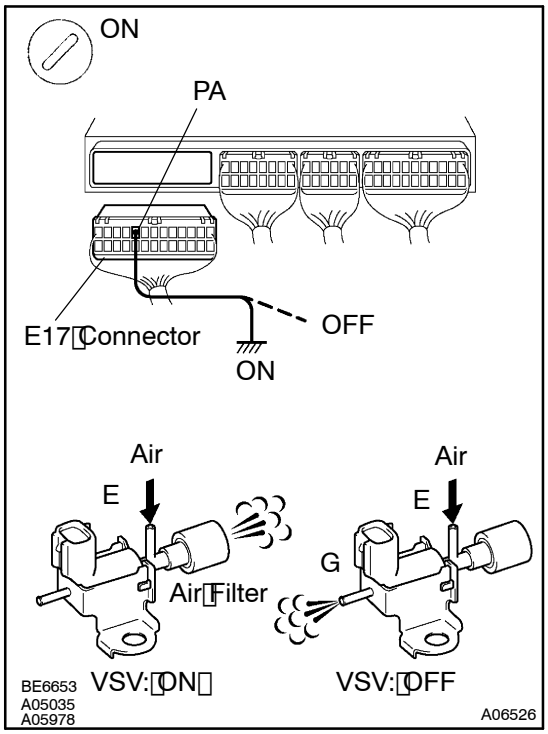

PREPARATION:

(a) Remove the glove compartment door.
(b) Disconnect the "E17" connector of engine ECU.
(c) Turn the ignition switch ON.

CHECK:

Check VSV function

(a) Connect between terminal PA of engine ECU and body ground (VSV is ON).
(b) Disconnect between terminal PA of engine ECU and body ground (VSV is OFF).

OK:

VSV is ON:
Air from pipe E flows out through the air filter.
VSV is OFF:
Air from pipe E flows out through pipe G.

OK	Check and replace engine ECU (See page IN–19).

NG

8	Check for open and short in harness and connector between engine ECU and VSV for turbo pressure sensor and ECD main relay (Marking: ECD) (See page IN–19).

NG	Repair harness or connector.

OK

Replace VSV for turbo pressure sensor.