DI3S9–01

DTC	39	Fuel Temp. Sensor Circuit Malfunction

CIRCUIT DESCRIPTION

(Fig.1)

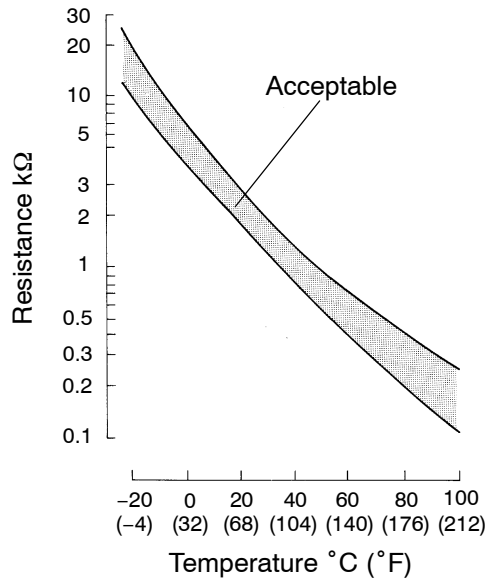

The fuel temperature sensor senses the fuel temperature. A thermistor built into the sensor changes the resistance value according to the fuel temperature. The lower the fuel temperature, the greater the thermistor resistance value, and the higher the fuel temperature, the lower the thermistor resistance value (See Fig.1).

The fuel temperature sensor is connected to the engine ECU (See below). The 5 V power source voltage in the engine ECU is applied to the fuel temperature sensor from the terminal THF via a resistor R. That is, the resistor R and the fuel temperature sensor are connected in series. When the resistance value of the fuel temperature sensor changes in accordance with changes in the fuel temperature, the potential at the terminal THF also changes. Based on this signal, the engine ECU increases the fuel injection volume to improve driveability during low engine revolution and high fuel temperature.

DTC No.	DTC Detecting Condition	Trouble Area
39	Open or short in fuel temp. sensor circuit for 0.5 sec. or more	• Open or short in fuel temp. sensor circuit • Fuel temp. sensor • Engine ECU

HINT:

After confirming DTC 39, use the hand–held tester to confirm the water temperature from "CURRENT DATA".

Temperature displayed	Malfunction
–40°C (–40°F)	Open circuit
140°C (284°F) or more	Short circuit

WIRING DIAGRAM

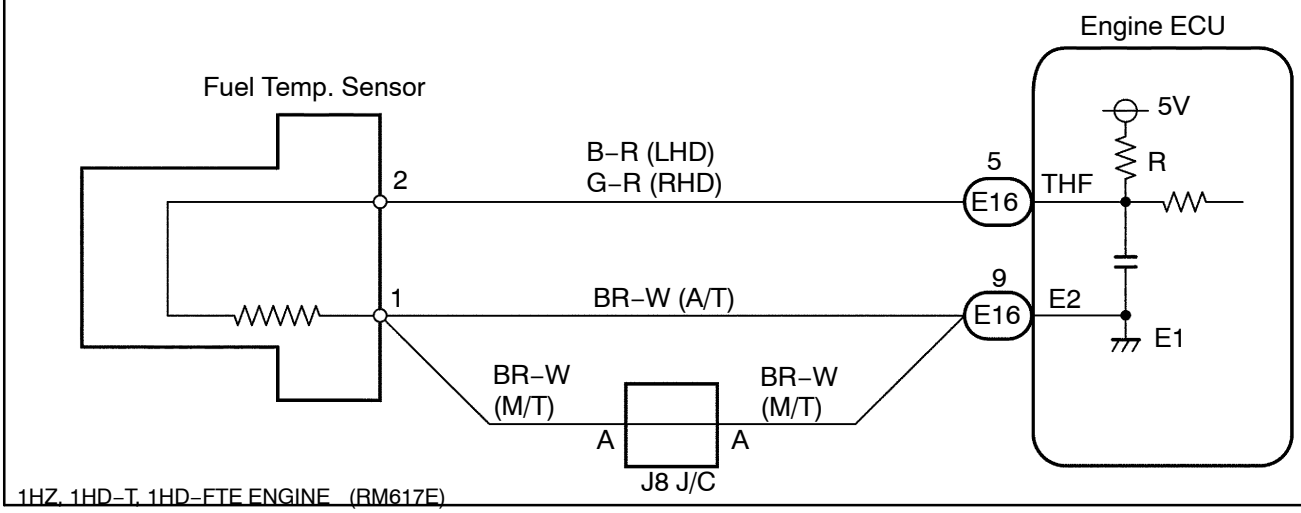

INSPECTION PROCEDURE

HINT:
If DTC ”22” (Water Temp. Sensor Circuit Malfunction), ”24” (Intake Air Temp. Sensor Circuit Malfunction), ”35” (Turbo Pressure Sensor Circuit Malfunction) and ”39” (Fuel Temp. Sensor Malfunction) are output simultaneously, E2 (sensor ground) may be open.

When using hand–held tester

1	**Connect the hand–held tester, and read value of fuel temperature.**

PREPARATION:
(a) Connect the hand–held tester to the DLC3.
(b) Turn the ignition switch ON and push the hand–held tester main switch ON.

CHECK:
Read temperature value on the hand–held tester.

OK:
Same as actual fuel temperature.

HINT:
- If there is open circuit, hand–held tester indicates –40°C (–40°F).
- If there is short circuit, hand–held tester indicates 140°C (284°F) or more.

NG → **–40°C (–40°F) ... Go to step 2.**
140°C (284°F) or more ... Go to step 4.

OK

Check for intermittent problems (See page DI–4).

2	Check for open in harness or engine ECU.

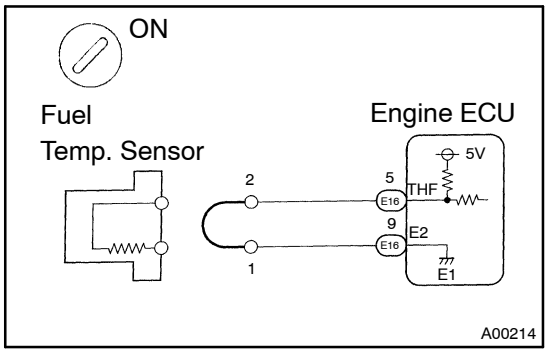

PREPARATION:

(a) Disconnect the fuel temp. sensor connector.
(b) Connect sensor wire harness terminals together.
(c) Turn the ignition switch ON.

CHECK:

Read temperature value on the hand–held tester.

OK:

Temperature value: 140°C (284°F) or more

OK	Confirm good connection at sensor. If OK, replace fuel temp. sensor.

NG

3	Check for open in harness or engine ECU.

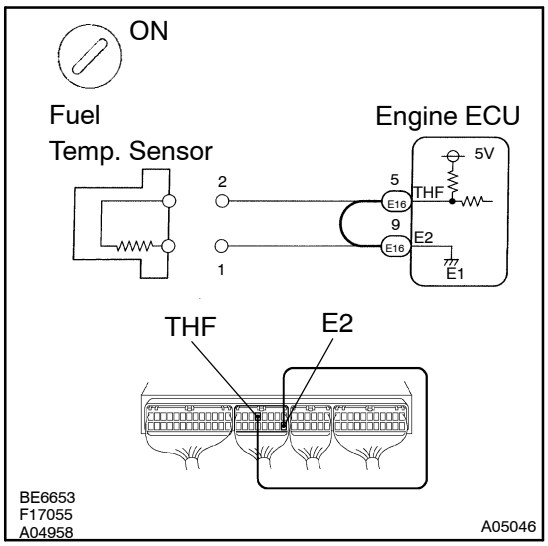

PREPARATION:

(a) Remove the glove compartment door.
(b) Connect between terminals THF and E2 of engine ECU connector.

HINT:

Fuel temp. sensor connector is disconnected. Before checking, do a visual and contact pressure check for the engine ECU connector (See page IN–19).

(c) Turn the ignition switch ON.

CHECK:

Read temperature value on the hand–held tester.

OK:

Temperature value: 140°C (284°F) or more

OK	Open in harness between terminal E2 or THF, repair or replace harness.

NG

Confirm good connection at engine ECU. If OK, replace engine ECU.

4	Check for short in harness or engine ECU.

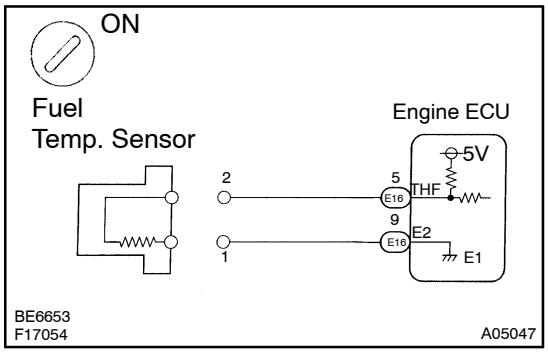

PREPARATION:

(a) Disconnect the fuel temp. sensor connector.

(b) Turn the ignition switch ON.

CHECK:

Read temperature value on the hand–held tester.

OK:

Temperature value: –40˚C (–40˚F)

OK	Replace fuel temp. sensor.

NG

5	Check for short in harness or engine ECU.

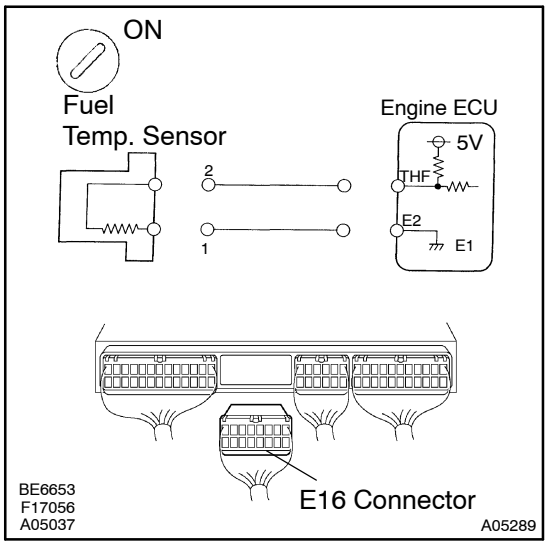

PREPARATION:

(a) Remove the glove compartment door.

(b) Disconnect the ”E16” connector of engine ECU.

HINT:

Fuel temp. sensor connector is disconnected.

(c) Turn the ignition switch ON.

CHECK:

Read temperature value on the hand–held tester.

OK:

Temperature value: –40˚C (–40˚F)

OK	Repair or replace harness or connector.

NG

Check and replace engine ECU (See page IN–19).

When not using hand–held tester

1	**Check voltage between terminals THF and E2 engine ECU connector.**

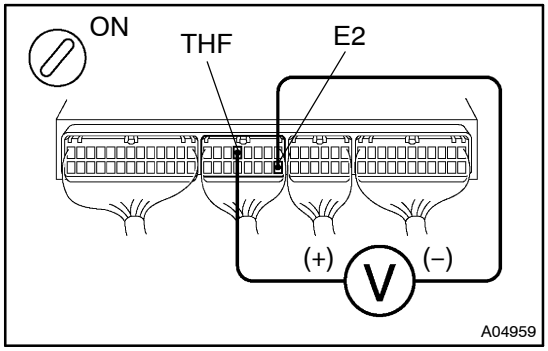

PREPARATION:

(a) Remove the glove compartment door.

(b) Turn the ignition switch ON.

CHECK:

Measure voltage between terminals THF and E2 of engine ECU connecter.

OK:

Fuel temp. °C (°F)	Voltage
20 (68) (Engine is cool)	0.2 – 3.8 V
80 (176) (Engine is hot)	0.1 – 1.5 V

OK	**Check for intermittent problems (See page DI–4).**

NG

2	**Check fuel temp. sensor (See page ED–6).**

NG	**Replace fuel temp. sensor.**

OK

3	**Check for open and short in harness and connector between engine ECU and fuel temp. sensor (See page IN–19).**

NG	**Repair or replace harness or connector.**

OK

Check and replace engine ECU (See page IN–19).