DTC	42	Vehicle Speed Sensor Signal Circuit Malfunction

CIRCUIT DESCRIPTION

The vehicle speed sensor outputs a 4–pulse signal for every revolution of the rotor shaft, which is rotated by the transmission output shaft via the driven gear. After this signal is converted into a more precise rectangular waveform by the waveform shaping circuit inside the combination meter, it is then transmitted to the engine ECU. The engine ECU determines the vehicle speed based on the frequency of these pulse signals.

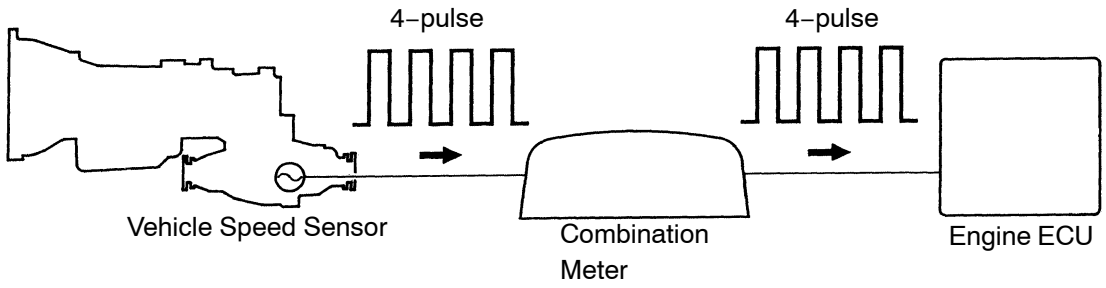

DTC No.	DTC Detecting Condition	Trouble Area
42	All conditions below are detected continuously for 8 sec. or more: (a) Vehicle speed signal: 0 km/h (0 mph) (b) Engine speed: 2,400 ~ 4,000 rpm (c) Engine coolant temp.: 60°C (176°F) or more (d) Accelerator pedal opening angle : 60 % or more	• Open or short in vehicle speed sensor circuit • Vehicle speed sensor • Combination meter • Engine ECU

WIRING DIAGRAM

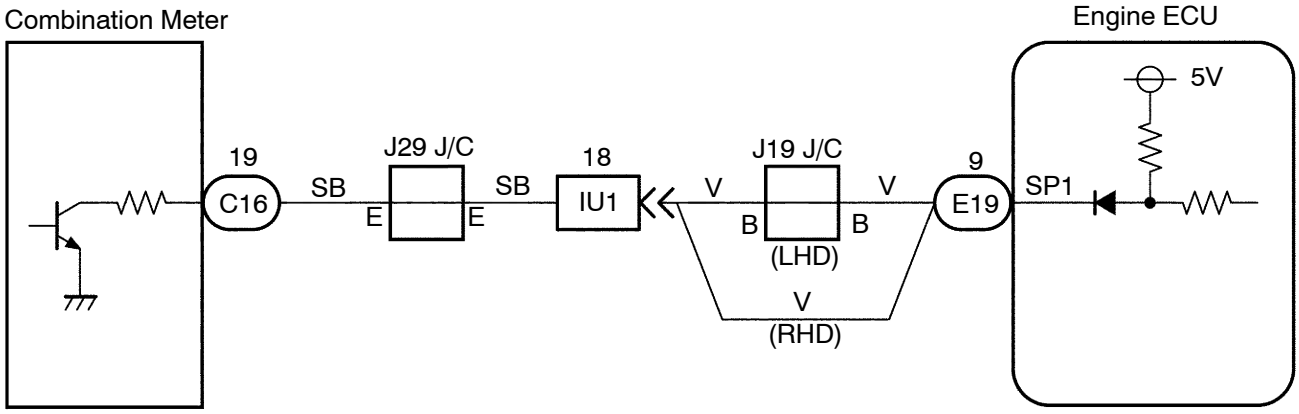

INSPECTION PROCEDURE

1	**Check operation of speedometer.**

CHECK:

Drive the vehicle and check if the operation of the speedometer in the combination meter is normal.

HINT:

The vehicle speed sensor is operating normally if the speedometer display is normal.

NG → **Check speedometer.**

OK

2	**Check voltage between terminal SP1 of engine ECU and body ground.**

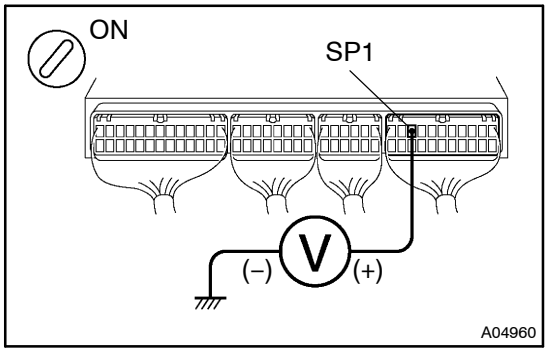

PREPARATION:

(a) Remove the glove compartment door.
(b) Shift the shift lever to neutral.
(c) Jack up one of the front wheels.
(d) Turn the ignition switch ON.

CHECK:

Measure voltage between terminal SP1 of engine ECU and body ground when the wheel is turned slowly.

OK:

Voltage is generated intermittently.

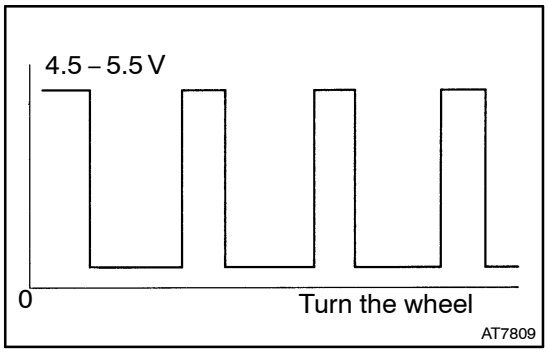

NG → **Check and repair harness and connector between combination meter and engine ECU (See page IN–19).**

OK

Check and replace engine ECU (See page IN–19).