DTC	97	EDU Circuit Malfunction

CIRCUIT DESCRIPTION

The EDU has been adopted to drive the spill control valve at high speeds. The EDU has realized high–speed driving under high fuel pressure conditions through the use of a DC/DC converter that provides a high–voltage, quick–charging system.

The engine ECU constantly monitors the EDU and stops the engine in case an abnormal condition is detected.

The battery voltage is increased by the DC/DC converter. A voltage of approximately 150 V is applied to the spill control valve in accordance with the IJ+ signal received from the engine ECU. Also at this time, the injection verification signal (IJf) is sent to the engine ECU.

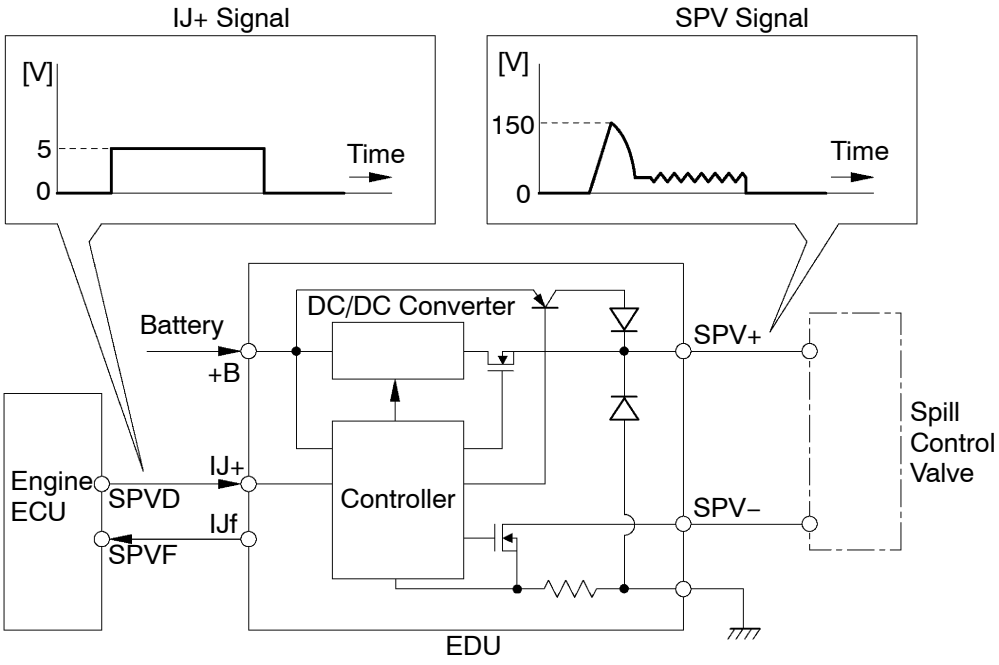

A05973

DTC No.	DTC Detecting condition	Trouble Area
97	Although the SPVD is output to EDU with the engine speed at 500 rpm or more, the SPVF is not input continuously 5 times or more	• Open or short in EDU circuit • EDU • Spill control valve

WIRING DIAGRAM

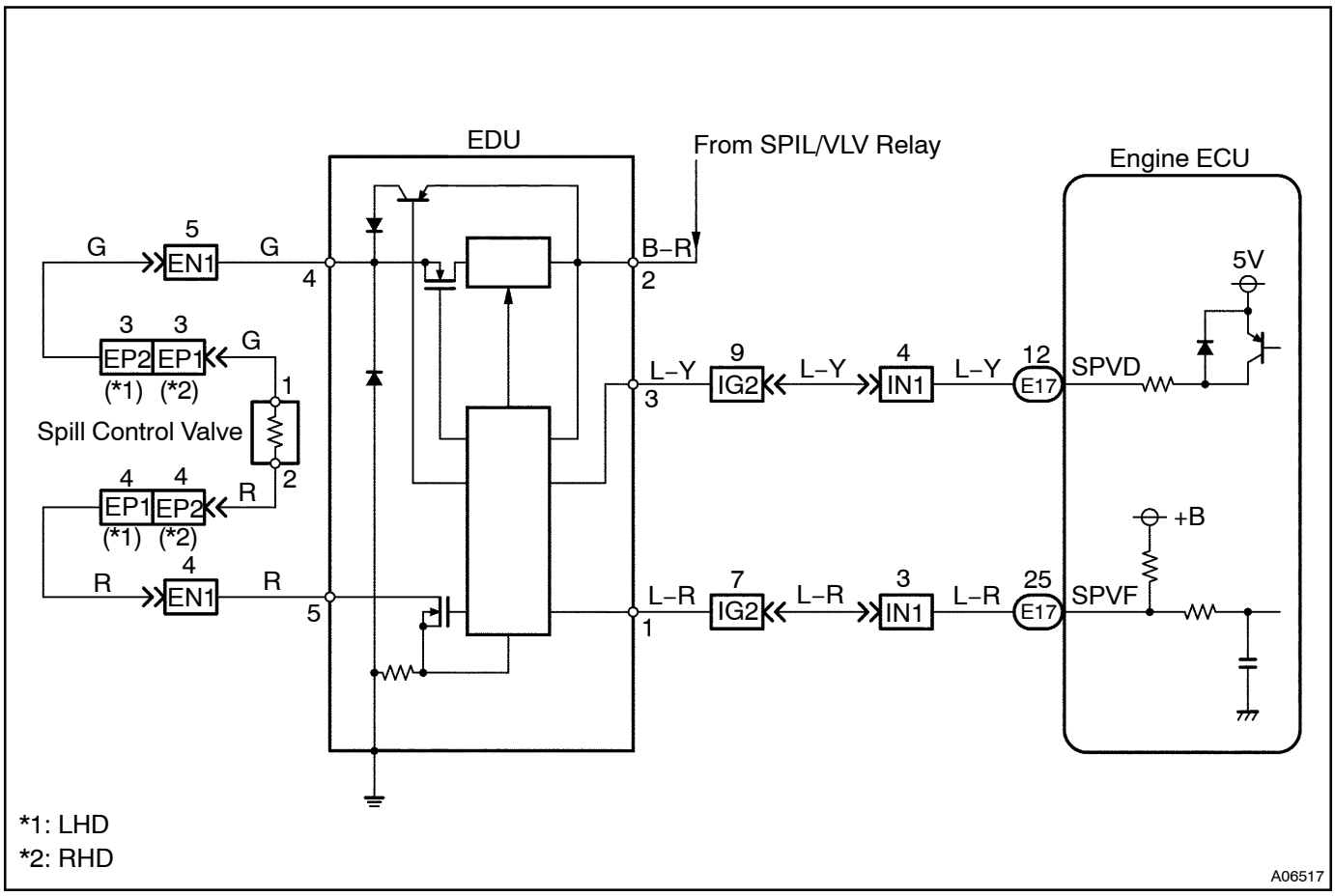

INSPECTION PROCEDURE

1	**Check voltage between terminal 2 of wire harness side connector and body ground.**

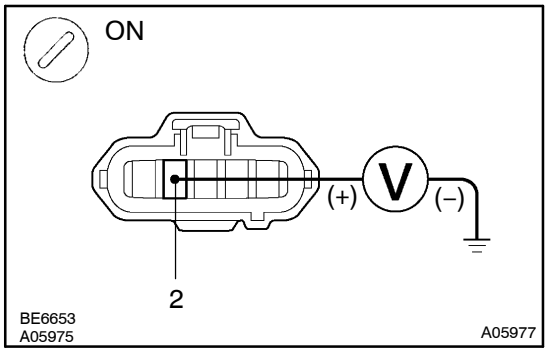

PREPARATION:

(a) Disconnect the EDU connector.

(b) Turn the ignition switch ON.

CHECK:

Measure voltage between terminal 2 of wire harness side connector and body ground.

OK:

Voltage: 10 – 14 V

NG	**Check ECU power source circuit (See page DI–76).**

OK

2	**Check continuity EDU ground bolt and body ground.**

NG → **Tighten EDU ground bolt.**

OK

3	**Check resistance between terminals 4 and 5 of wire harness side connector.**

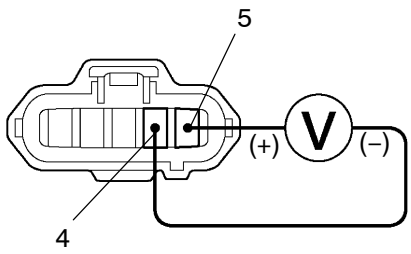

CHECK:
Measure resistance between terminals 4 and 5 of wire harness side connector.
OK:
Resistance: Approx. 1.7 Ω

OK → **Go to step 6.**

NG

4	**Check spill control valve (See page FU–113).**

NG → **Check and replace injection pump (See page FU–113).**

OK

5	**Check for open and short in harness and connector between spill control valve and EDU. (See page IN–19).**

NG → **Repair or replace harness or connector.**

OK

6	**Check for open and short in harness and connector between engine ECU and EDU (See page IN–19).**

NG → **Repair or replace harness or connector.**

OK

7	**Check voltage between terminal SPVD of engine ECU connector and body ground.**

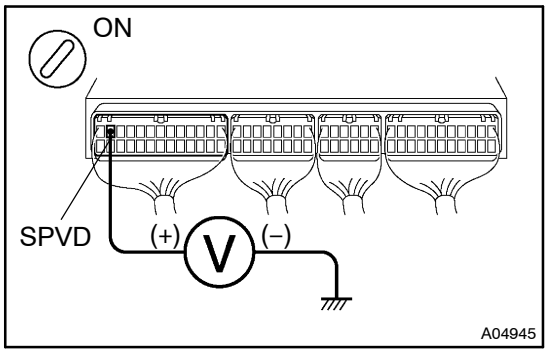

PREPARATION:

(a) Remove the glove compartment door.

(b) Turn the ignition switch ON.

CHECK:

Measure voltage between terminal SPVD of engine ECU connector and body ground.

OK:

Voltage: Approx. 0 V

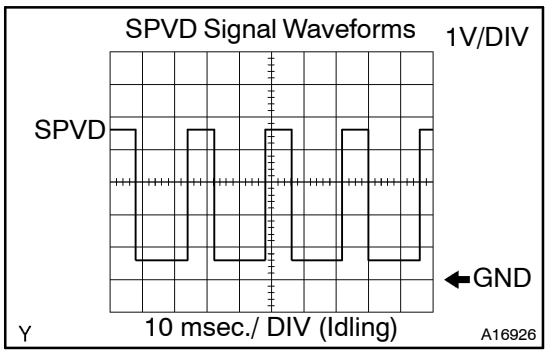

Reference: INSPECTION USING OSCILLOSCOPE

During idling, check waveform between terminals SPVD and E1 of engine ECU.

HINT:

The correct waveform is as shown.

NG → **Check and replace engine ECU (See page IN–19).**

OK

8	Check voltage between terminal SPVF of engine ECU and body ground.

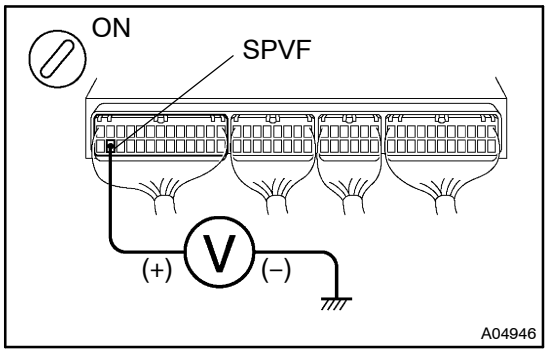

PREPARATION:

(a) Remove the glove compartment door.

(b) Turn the ignition switch ON.

CHECK:

Measure voltage between terminals SPVF of engine ECU and body ground.

OK:

Voltage: 9 –14 V

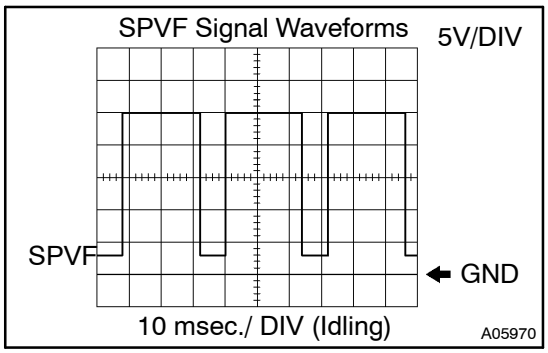

Reference: INSPECTION USING OSCILLOSCOPE

During idling, check waveform between terminals SPVF and E1 of engine ECU.

HINT:

The correct waveform is as shown.

NG → **Check and replace engine ECU (See page IN–19).**

OK

Check and replace EDU (See page ED–15).