DI322–02

ECU Power Source Circuit

CIRCUIT DESCRIPTION

When the ignition switch is turned ON, battery positive voltage is applied to the coil, closing the contacts of the ECD main relay (Marking: ECD) and supplying power to the terminal +B of the engine ECU.

WIRING DIAGRAM

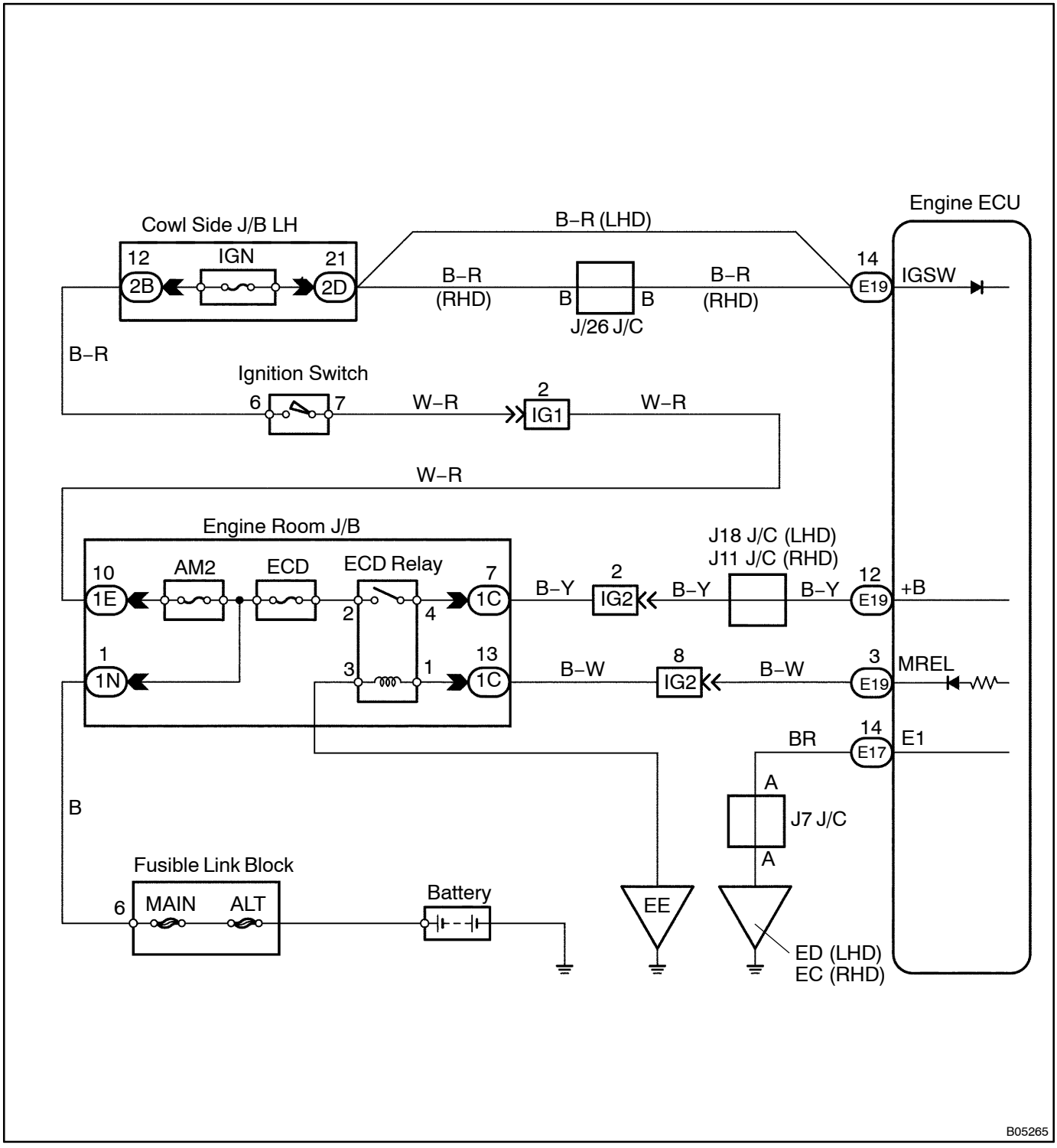

B05265

INSPECTION PROCEDURE

1	**Check voltage between terminals +B and E1 of engine ECU.**

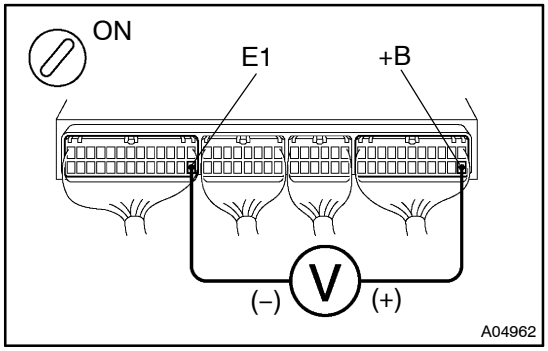

PREPARATION:

(a) Remove the glove compartment door.

(b) Turn the ignition switch ON.

CHECK:

Measure voltage between terminals +B and E1 of engine ECU.

OK:

Voltage: 9 – 14 V

OK	**Proceed to next circuit inspection shown on problem symptoms table (See page DI–19).**

NG

2	**Check for open in harness and connector between terminal E1 of engine ECU and body ground (See page IN–19).**

NG	**Repair or replace harness or connector.**

OK

3	**Check ECD main relay (Marking: ECD) (See page ED–3).**

NG	**Replace ECD main relay.**

OK

4	**Check ECD fuse.**

PREPARATION:
Remove the ECD fuse from the engine room J/B.
CHECK:
Check continuity of ECD fuse.
OK:
Continuity

NG → **Check for short in all the harness and components connected to ECD fuse.**

OK

5	**Check for open in harness and connector between engine ECU and ECD main relay (Marking: ECD), ECD main relay and battery (See page IN–19).**

NG → **Repair harness or connector.**

OK

6	**Check voltage between terminals IGSW and E1 of engine ECU.**

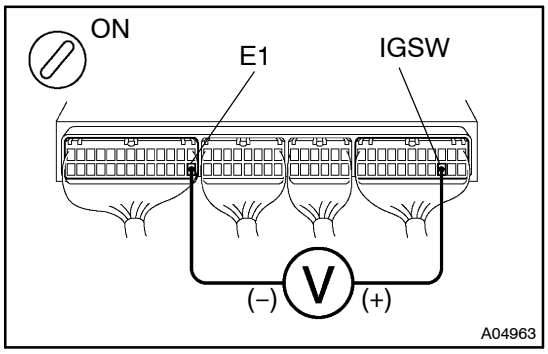

PREPARATION:
(a) Remove the glove compartment door.
(b) Turn the ignition switch ON.
CHECK:
Measure voltage between terminals IGSW and E1 of engine ECU.
OK:
Voltage : 9 – 14 V

OK → **Go to step 9.**

NG

7	**Check ignition switch (See Pub. No. RM616E2 BE section).**

NG → **Replace ignition switch.**

OK

8	**Check for open in harness and connector between ignition switch and engine ECU (See page IN–19).**

NG → **Repair or replace harness or connector.**

OK

9	**Check voltage between terminal MREL of engine ECU and body ground.**

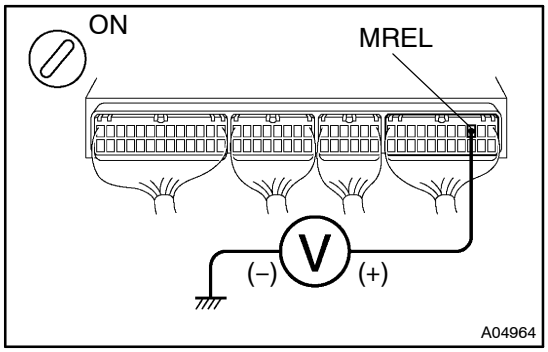

PREPARATION:

(a) Remove the glove compartment door.

(b) Turn the ignition switch ON.

CHECK:

Measure voltage between terminal MREL of engine ECU and body ground.

OK:

Voltage: 9 – 14 V

OK → **Check and replace engine ECU (See page IN–19).**

NG

Check for open in harness and connector between engine ECU and ECD main relay (Marking: ECD), ECD main relay and body ground (See page IN–19).