DI3SB–01

Intake Heater Control Circuit

CIRCUIT DESCRIPTION

When the engine coolant temperature is below 40˚C (104˚F), turning the ignition switch ON causes the intake heater relay to turn ON, allowing the intake heater to operate. The intake heater operates until the engine coolant temperature becomes higher than 40˚C (104˚F), or the maximum of 90 seconds.
At the same time, the glow indicator lamp is illuminated in accordance with the engine coolant temperature (maximum 10 seconds).

WIRING DIAGRAM

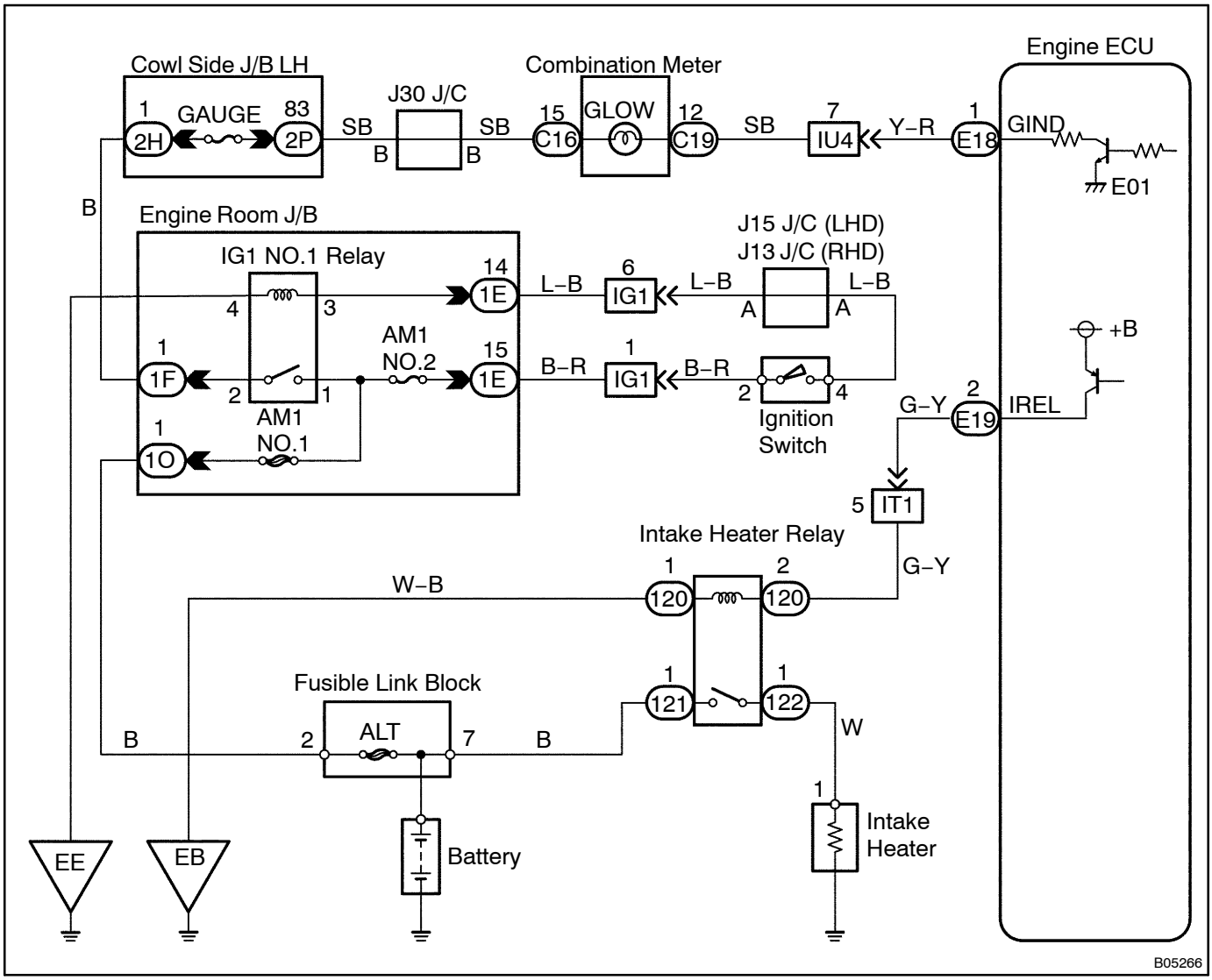

INSPECTION PROCEDURE

1	**Does glow indicator light up?**

PREPARATION:
Turn the ignition switch ON.
CHECK:
Does the glow indicator light up?
OK:
The glow indicator lights up for 0.5 sec. or more.

OK	**Go to step 5.**

NG

2	**Check voltage between terminal GIND of engine ECU connector and body ground.**

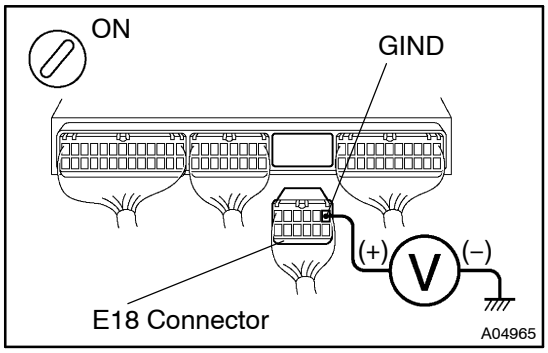

PREPARATION:
(a) Remove the glove compartment door.
(b) Disconnect the ”E18” connector of engine ECU.
(c) Turn the ignition switch ON.
CHECK:
Measure voltage between terminal GIND of engine ECU connector and body ground.
OK:
Voltage: 9 – 14 V

OK	**Check and replace engine ECU (See page IN–19).**

NG

3	**Check GAUGE fuse.**

PREPARATION:

Remove the GAUGE fuse from the cowl side J/B LH.

CHECK:

Measure continuity of GAUGE fuse.

OK:

Continuity

NG → **Check for short in all the harness and components connected to GAUGE fuse.**

OK

4	**Check glow indicator light bulb.**

NG → **Replace bulb.**

OK

Check for open in harness and connector between combination meter and engine ECU, combination meter and GAUGE fuse (See page IN–19).

5	**Check glow indicator lighting time (See page ST–1).**

NG → **Check and replace engine ECU (See page IN–19).**

OK

6	**Are there any DTC being output?**

YES → **Go to relevant DTC chart (See page DI–14).**

NO

7	**Check intake heater relay (See page ST–7).**

NG → **Replace intake heater relay.**

OK

8	**Check voltage between terminal IREL of engine ECU and body ground at cranking.**

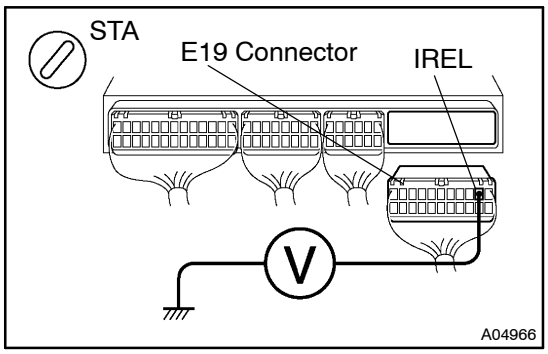

PREPARATION:

(a) Remove the glove compartment door.
(b) Disconnect the ”E19” connector of engine ECU.
(c) Start the engine.

CHECK:

Measure voltage between terminal IREL of engine ECU and body ground at cranking.

OK:

Voltage: 9 – 14 V

NG → **Check and replace engine ECU (See page IN–19).**

OK

9	Check for open and short in harness and connector between intake heater relay and engine ECU, intake heater relay and body ground (See page IN–19).

NG → Repair harness or connector.

OK ↓

10	Check resistance of intake heater (See page ST–5).

NG → Replace intake heater.

OK ↓

11	Inspect intake heater installation.

NG → Tighten intake heater.

OK ↓

12	Check for open in harness and connector between intake heater relay and intake heater (See page IN–19).

NG → Repair harness or connector.

OK ↓

Proceed to next circuit inspection shown on problem symptoms table (See page DI–19).