DI326–02

A/C Signal Circuit

CIRCUIT DESCRIPTION

When the A/C compressor is ON, the A/C amplifier sends the A/C signal to the engine ECU, then engine ECU increases the fuel injection volume to improve driveability during engine idling.

WIRING DIAGRAM

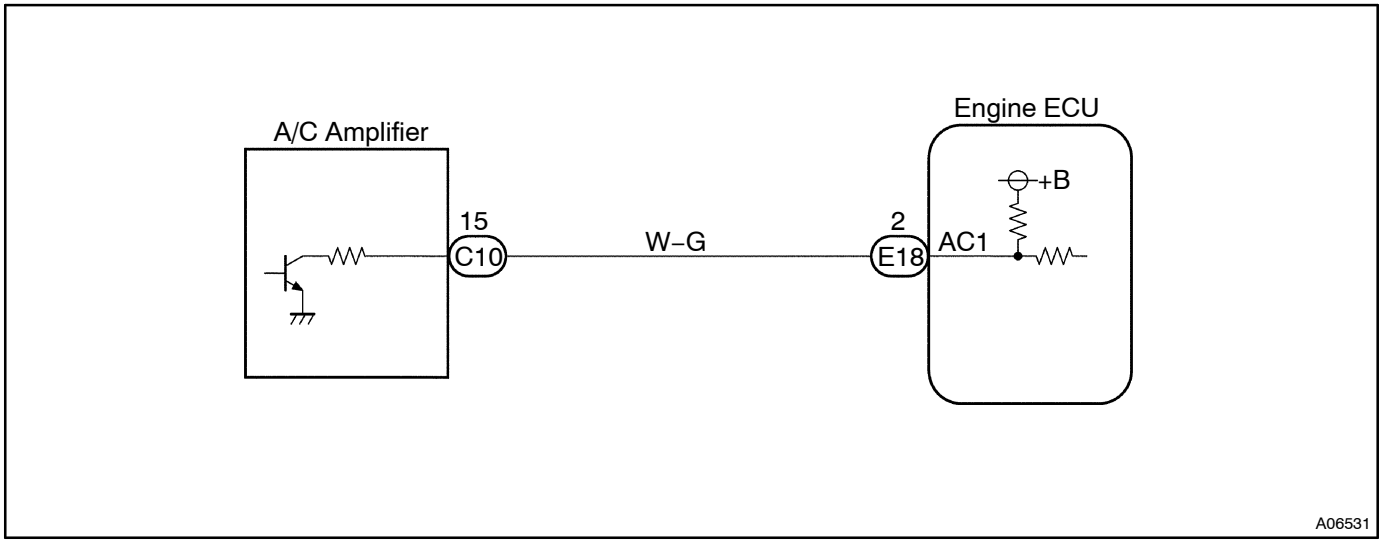

INSPECTION PROCEDURE

When using hand–held tester

1	**Connect the hand–held tester and check A/C signal.**

PREPARATION:

(a) Connect the hand–held tester to the DLC3.

(b) Turn the ignition switch ON and push the hand–held tester main switch ON.

CHECK:

Read A/C signal on the hand–held tester while A/C compressor is ON.

OK:

A/C switch condition	OFF	ON
A/C signal	OFF	ON

OK → **Proceed to next circuit inspection shown on problem symptoms table (See page DI–19).**

NG

2	Check voltage between terminal AC1 of engine ECU and body ground.

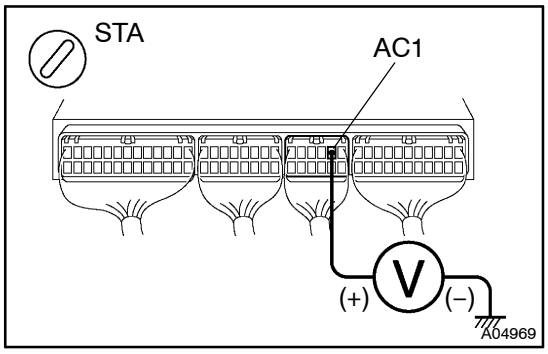

PREPARATION:

(a) Remove the glove compartment door.

(b) Start the engine.

CHECK:

Measure voltage between terminal AC1 of engine ECU and body ground when A/C switch is turned to ON and OFF.

OK:

A/C switch condition	Voltage
ON	Below 1.5 V
OFF	9 – 14 V

OK → **Check and replace engine ECU (See page IN–19).**

NG

3	Check for open and short in harness and connector between engine ECU and A/C amplifier (See page IN–19).

NG → **Repair or replace harness or connector.**

OK

Check and replace A/C amplifier.

When not using hand–held tester

1	**Check voltage between terminal AC1 of engine ECU and body ground.**

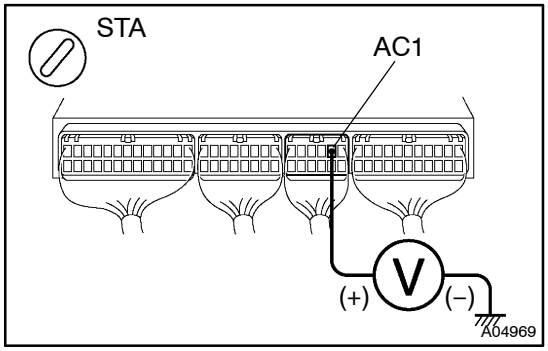

PREPARATION:

(a) Remove the glove compartment door.

(b) Start the engine.

CHECK:

Measure voltage between terminal AC1 of engine ECU and body ground when A/C switch is turned to ON and OFF.

OK:

A/C switch condition	Voltage
ON	Below 1.5 V
OFF	9 – 14 V

OK → **Proceed to next circuit inspection shown on problem symptoms table (See page DI–19).**

NG

2	**Check for open and short in harness and connector between engine ECU and A/C amplifier (See page IN–19).**

NG → **Repair or replace harness or connector.**

OK

Check and replace A/C amplifier.