DI3SE–01

Diagnostic Connector (DLC3) Circuit

CIRCUIT DESCRIPTION

Terminals TC and CG are located in the DLC3.
The DLC3 is located under the finish lower panel. When terminals TC and CG are connected, DTC in normal mode or test mode can be read from the check engine warning light in the combination meter.
Also, terminal SIL is located in the DLC3. This terminal is used by the M–OBD communication with hand–held tester.

WIRING DIAGRAM

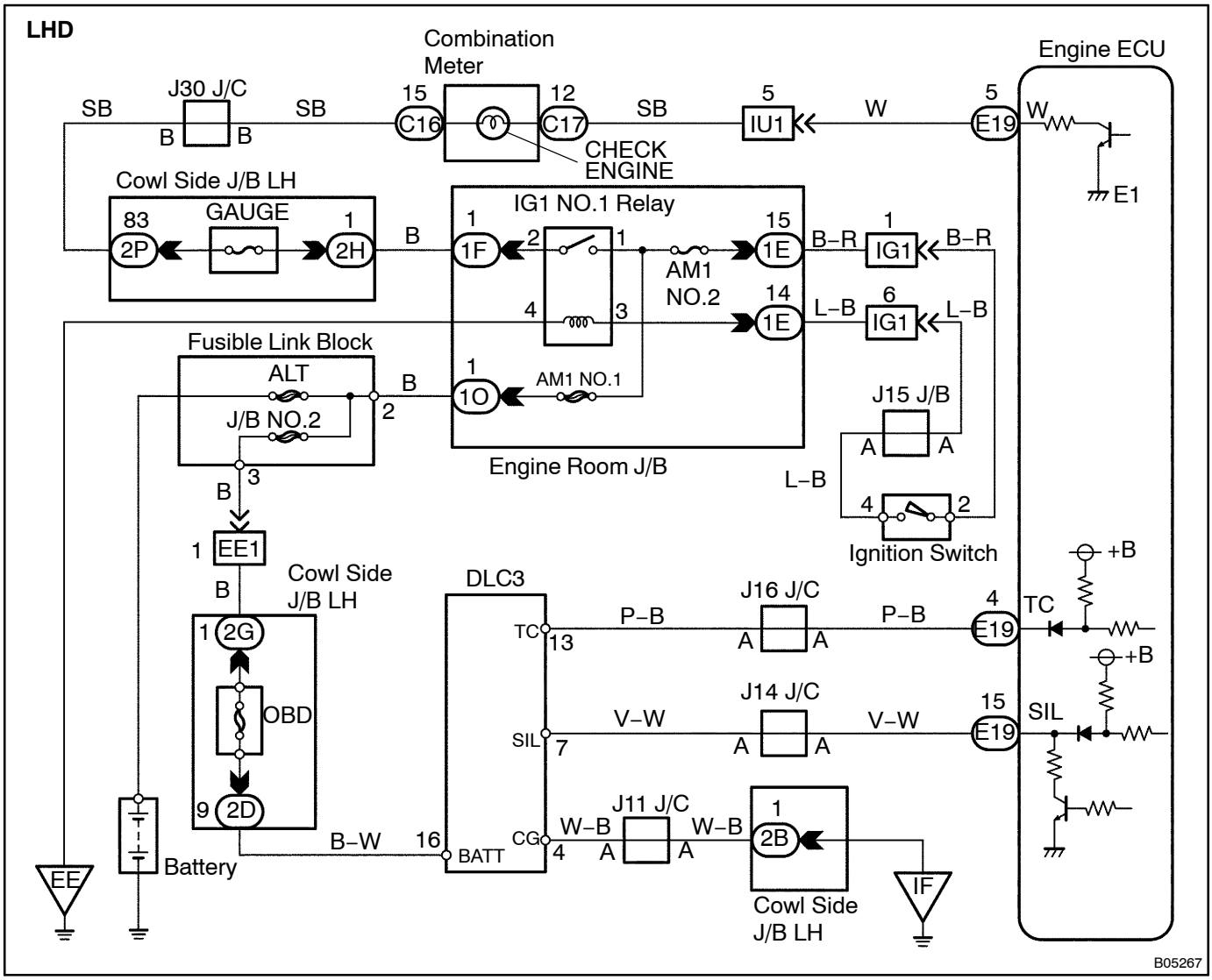

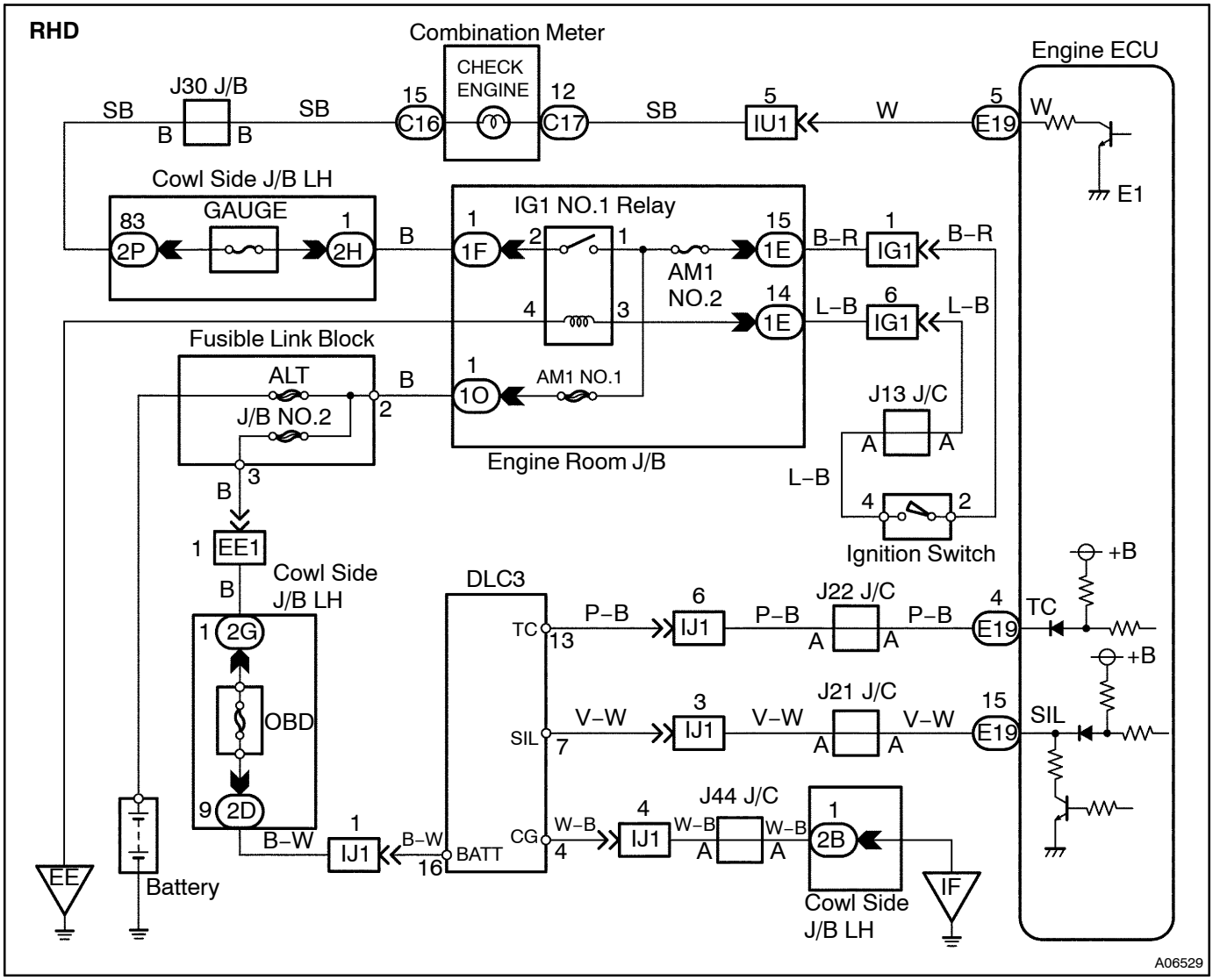
RHD
Combination Meter
CHECK ENGINE
Engine ECU
J30 J/B
SB
B
B
SB
15
C16
12
C17
SB
5
IU1
W
5
E19
W
E1
Cowl Side J/B LH
GAUGE
83
2P
1
2H
B
IG1 NO.1 Relay
1
1F
2
1
15
1E
B–R
1
IG1
B–R
AM1 NO.2
4
3
14
1E
L–B
6
IG1
L–B
Fusible Link Block
ALT
J/B NO.2
B
2
1
1O
AM1 NO.1
J13 J/C
A
A
Engine Room J/B
3
B
L–B
4
2
Ignition Switch
1
EE1
B
Cowl Side J/B LH
DLC3
+B
1
2G
OBD
9
2D
TC
13
P–B
6
IJ1
P–B
J22 J/C
A
A
P–B
4
E19
TC
+B
SIL
7
V–W
3
IJ1
V–W
J21 J/C
A
A
V–W
15
E19
SIL
J44 J/C
B–W
1
IJ1
B–W
16
BATT
CG
4
W–B
4
IJ1
W–B
A
W–B
A
1
2B
Cowl Side J/B LH
EE
Battery
IF
A06529

INSPECTION PROCEDURE

1	Check the check engine warning light condition.

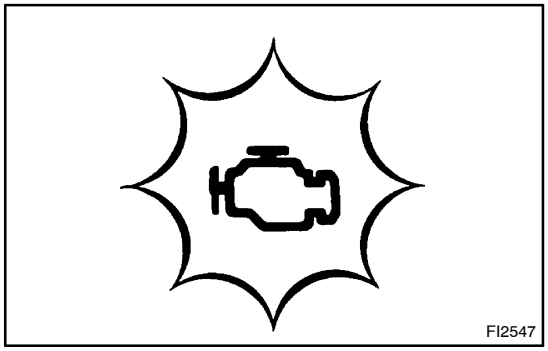

PREPARATION:

(a) Turn the ignition switch ON.

(b) Using SST, connect the terminals TC and CG of DLC3.
SST 09843–18040

CHECK:

Check the check engine warning light condition.

OK:

Check engine warning light : Blinking

HINT:

If this inspection OK and there is no hand–held tester, do not need to do the following steps and this circuit is OK. Proceed to next circuit inspection shown on problem symptom table (See page DI–19).

OK	Go to step 7.

NG

2	Check voltage between terminals TC and CG of DLC3.

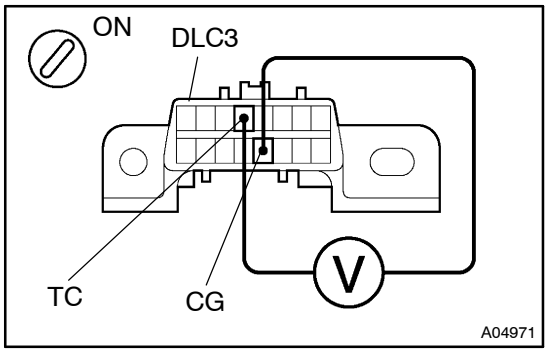

PREPARATION:

Turn the ignition switch ON.

CHECK:

Measure the voltage between terminals TC and CG of DLC3.

OK:

Voltage : 9 – 14 V

OK	Go to step 5.

NG

3	**Check continuity terminal CG of DLC3 and body ground.**

NG → **Repair or replace harness or connector.**

OK

4	**Check for open and short in harness and connector between terminal TC of DLC3 and terminal TC of engine ECU (See page IN–19).**

NG → **Repair or replace harness or connector.**

OK

Check and replace engine ECU (See page IN–19).

5	**Check voltage between terminal W of engine ECU connector and body ground.**

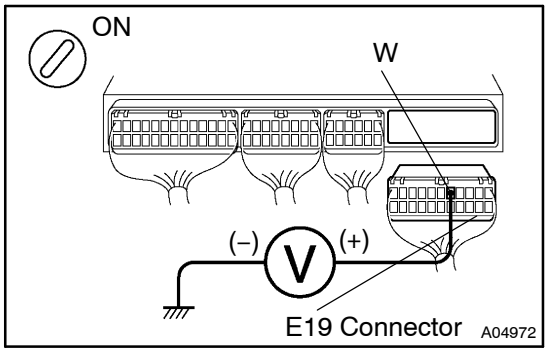

PREPARATION:

(a) Remove the glove compartment door.
(b) Disconnect the ”E19” connector of engine ECU.
(c) Turn the ignition switch ON.

CHECK:

Measure voltage between terminal W of engine ECU connector and body ground.

OK:

Voltage : 9 – 14 V

OK → **Check and replace engine ECU (See page IN–19).**

NG

6	Check the bulb of check engine warning light.

NG → Replace bulb.

OK →

Check for open in harness and connector between terminal W of engine ECU and combination meter (See page IN–19).

7	Can you read the DTC (including normal DTC) using hand–held tester?

YES → Proceed to next circuit inspection shown on problem symptom table (See page DI–19).

NO →

8	Check voltage between terminal BATT of DLC3 and body ground.

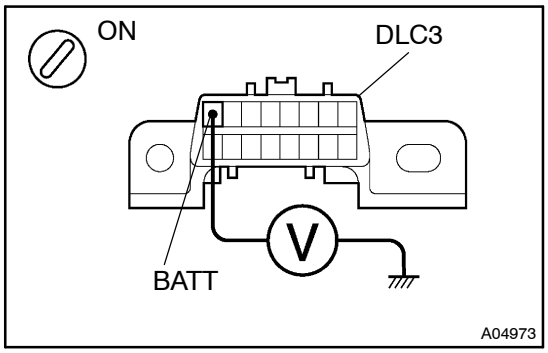

CHECK:

Measure voltage between terminal BATT of DLC3 and body ground.

OK:

Voltage : 9 – 14 V

NG → Check for open and short in harness and connector between terminal BATT of DLC3 and fusible link block (See page IN–19).

OK →

Check for open and short in harness and connector between terminal SIL of DLC3 and terminal SIL of engine ECU (See page IN–19).