DI325–02

Starter Signal Circuit

CIRCUIT DESCRIPTION

When the engine is being cranked, the intake air flow is slow, so fuel vaporization is poor. A rich mixture is therefore necessary in order to achieve good start ability. While the engine is being cranked, the battery positive voltage is applied to terminal STA of the engine ECU. The starter signal is mainly used to increase the fuel injection volume for the starting injection control and after–start injection control.

WIRING DIAGRAM

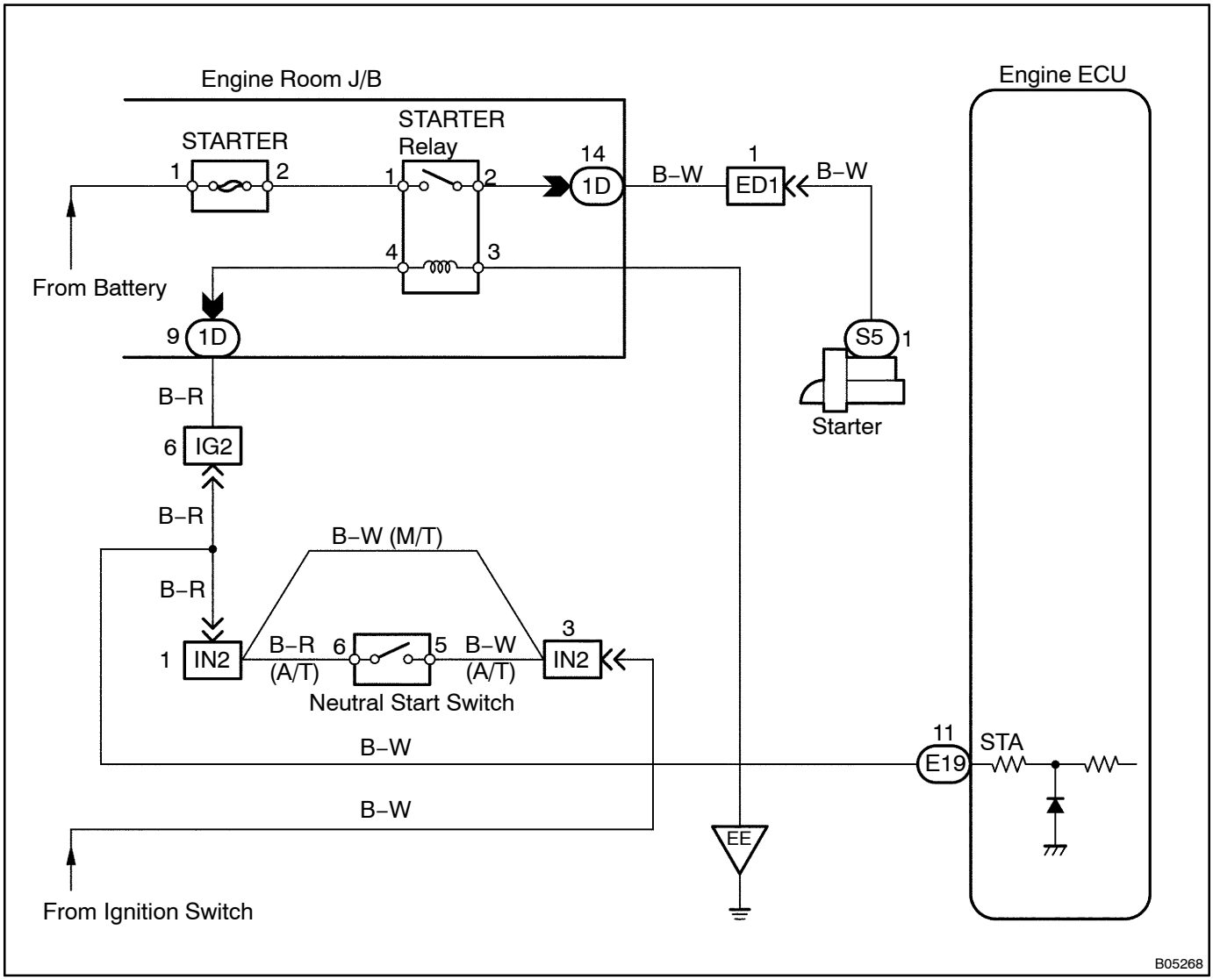

INSPECTION PROCEDURE

When using hand–held tester

HINT:

This diagnostic chart is based on the premise that the engine is being cranked under normal conditions. If the engine does not crank, proceed to the problem symptoms table on page DI–19.

1	**Connect the hand–held tester and check STA signal.**

PREPARATION:

(a) Connect the hand–held tester to the DLC3.

(b) Turn the ignition switch ON and push the hand–held tester main switch ON.

CHECK:

Read STA signal on the hand–held tester while starter operates.

OK:

Ignition switch position	ON	STA
STA signal	OFF	ON

OK → **Proceed to next circuit inspection shown on problem symptoms table (See page DI–19).**

NG

2	**Check for open in harness and connector between engine ECU and starter relay (Marking : STARTER) (See page IN–19).**

NG → **Repair or replace harness or connector.**

OK

Check and replace engine ECU (See page IN–19).

When not using hand–held tester

HINT:

This diagnostic chart is based on the premise that the engine is being cranked under normal conditions. If the engine does not crank, proceed to the problem symptoms table on page DI–19.

1	**Check the starter signal.**

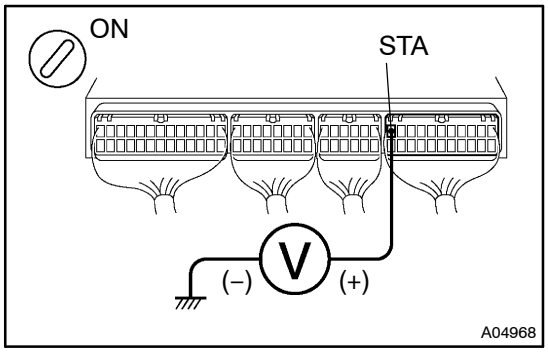

PREPARATION:

(a) Remove the glove compartment door.

(b) Turn the ignition switch ON.

CHECK:

Measure voltage between terminal STA of engine ECU connector and body ground during cranking.

OK:

Voltage: 6.0 V or more

OK	**Proceed to next circuit inspection shown on problem symptoms table (See page DI–19).**

NG

2	**Check for open in harness and connector between engine ECU and starter relay (Marking : STARTER) (See page IN–19).**

NG	**Repair or replace harness or connector.**

OK

Check and replace engine ECU (See page IN–19).