DI3SF–01

Neutral Start Switch Circuit (only for vehicles with A/T)

CIRCUIT DESCRIPTION

The neutral start switch goes on when the shift lever is in the N or P shift position. When it goes on the terminal NSW of the engine ECU is grounded to body ground via the starter relay thus the terminal NSW voltage becomes 0 V. When the shift lever is in the D, 2, L or R position, the neutral start switch goes off, so the voltage of the engine ECU terminal NSW becomes battery positive voltage, the voltage of the engine ECU internal power source.

If the shift lever is moved from the N position to the D position, this signal is used for air–fuel ratio correction, for idle speed control (estimated control), etc.

WIRING DIAGRAM

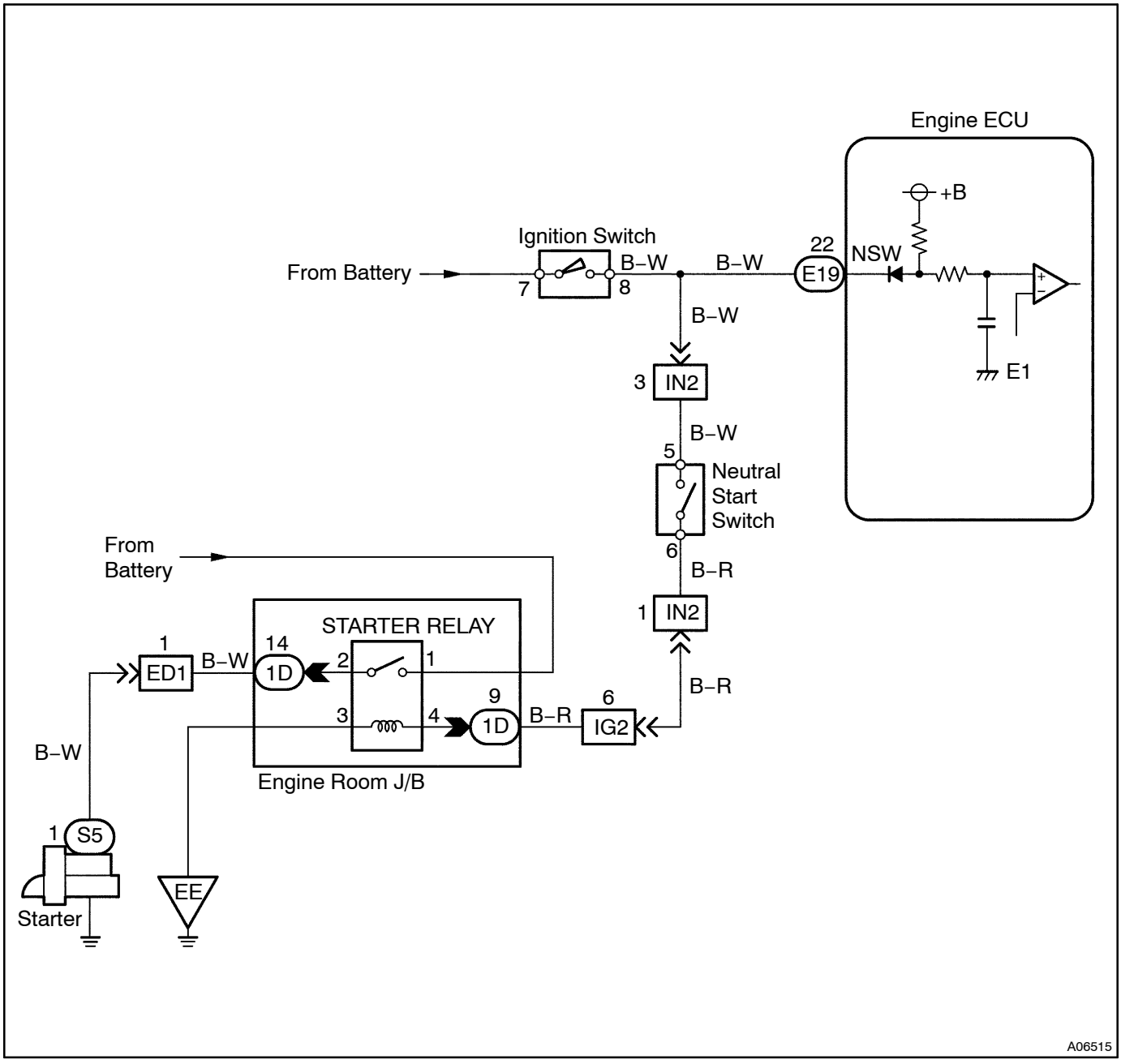

INSPECTION PROCEDURE

HINT:

This diagnosis chart is based on the premise that the engine is being cranked under normal conditions. If the engine does not crank, proceed to the problem symptoms table on page DI–19.

1	**Check neutral start switch.**

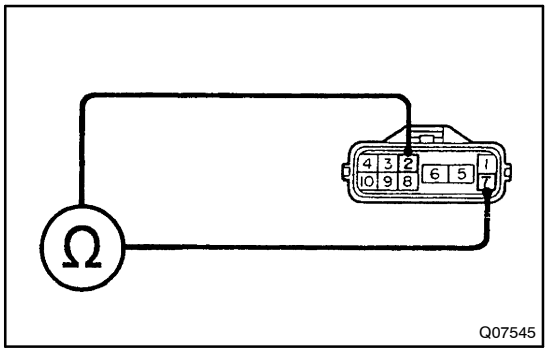

Q07545

PREPARATION:

Disconnect the neutral start switch connector.

CHECK:

Check continuity between each terminal shown below when the shift lever is shifted to each position.

OK:

Shift position	Terminal No. to continuity	
P	5 – 6	2 – 7
R	2 – 8	–
N	5 – 6	2 – 9
D	2 – 10	–
2	2 – 3	–
L	2 – 4	–

NG → **Replace neutral start switch.**

OK

2	**Check voltage between terminal NSW of engine ECU connector and body ground.**

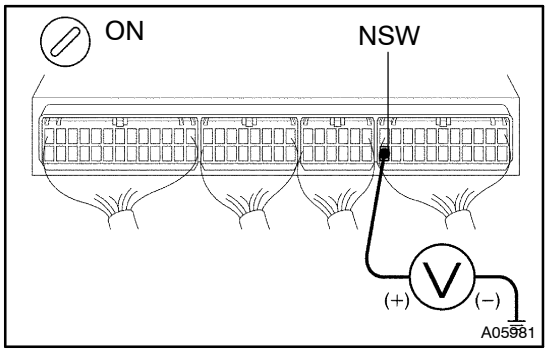

PREPARATION:

(a) Remove the glove compartment door.

(b) Turn the ignition switch ON.

CHECK:

Measure voltage between terminal NSW of engine ECU connector and body ground after the shift lever is moved to the following positions.

OK:

Shift lever position	P or N	L, 2, D or R
Voltage	0 – 3 V	9 – 14 V

OK

Check and replace engine ECU (See page IN–19).

NG

Check for open and short in harness and connector between neutral start switch and engine ECU (See page IN–19).