DI3SG–01

1st Gear Position Switch Circuit (only for vehicles with M/T)

CIRCUIT DESCRIPTION

The shift position switch on the side of transmission detects the 1st gear and limits the engine output when the high load is applied during running in the 1st gear.

WIRING DIAGRAM

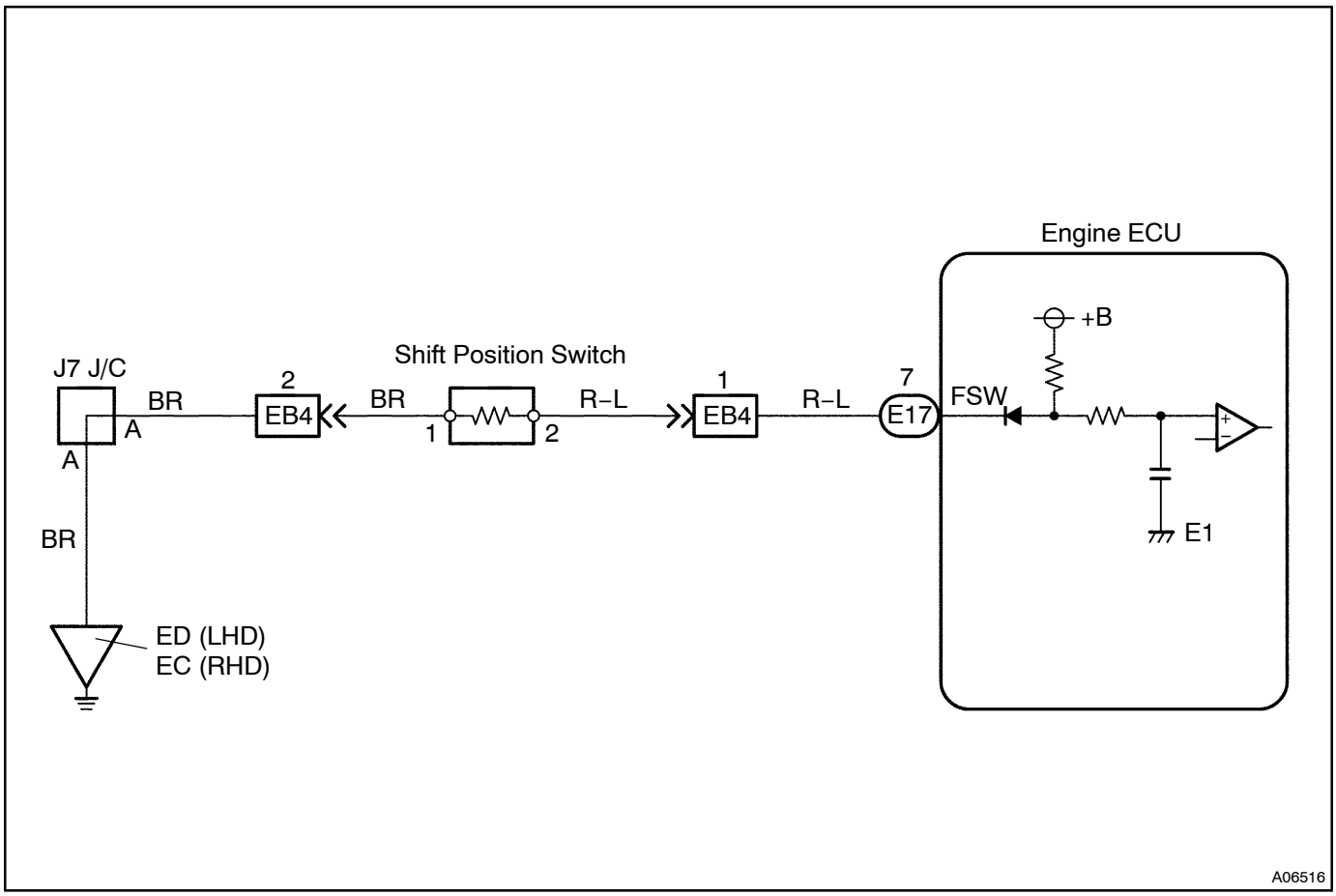

INSPECTION PROCEDURE

1	**Check shift position switch (See page ED–12).**

NG → **Replace shift position switch.**

OK

2	**Check voltage between terminal FSW of engine ECU connector and body ground.**

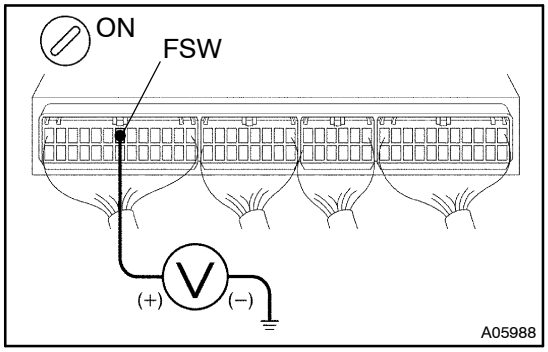

PREPARATION:

(a) Remove the glove compartment door.

(b) Turn the ignition switch ON.

CHECK:

Measure voltage between terminal FSW of engine ECU connector and body ground after the shift lever is moved to the following positions.

OK:

Shift lever position	1st gear	Except 1st gear
Voltage	9 – 14 V	0 – 3 V

OK → **Check and replace engine ECU (See page IN–19).**

NG

Check for open and short in harness and connector between shift position switch and engine ECU (See page IN–19).