DI3SH–01

Spill Valve Relay Circuit

CIRCUIT DESCRIPTION

When the ignition switch is turned ON, battery positive voltage is applied to the coil, closing the contacts of the spill valve relay (Marking : SPIL/VLV) and supplying power to the terminal +B of the EDU.

WIRING DIAGRAM

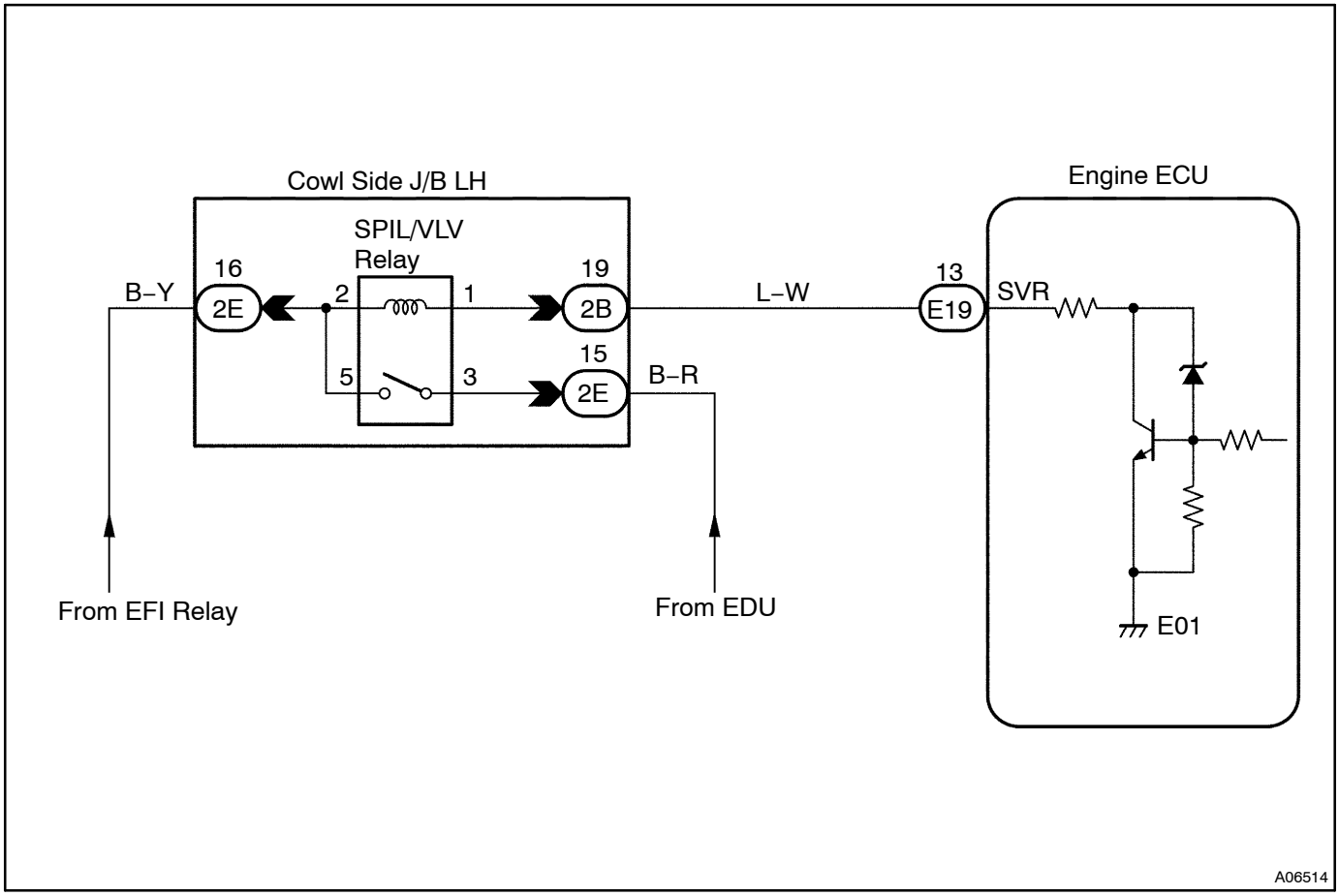

INSPECTION PROCEDURE

1	**Check spill valve relay (Marking : SPIL/VLV) (See page ED–4).**

NG → **Replace spill valve relay.**

OK

2	**Check voltage between terminal SVR of engine ECU connector and body ground.**

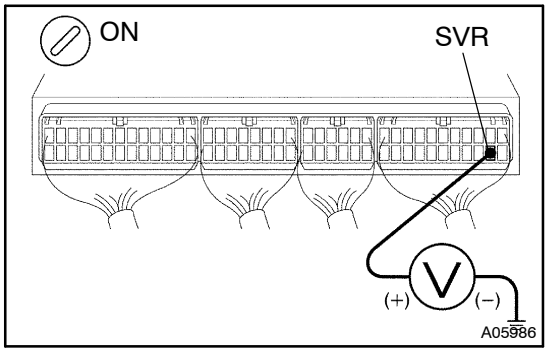

PREPARATION:

(a) Remove the glove compartment door.

(b) Turn the ignition switch ON.

CHECK:

Measure voltage between terminal SVR of engine ECU connector and body ground.

OK:

Voltage: 0 – 1.5 V

OK → **Check and replace engine ECU (See page IN–19).**

NG

Check for open in harness and connector between engine ECU and spill valve relay (Marking : SPIL/VLV) and spill valve relay and EDU (See page IN–19).