DI3SI–01

Heater Idle–Up Switch Circuit

CIRCUIT DESCRIPTION

When the vehicle is stopped with the power heater switch on the left side (LHD) or right side (RHD) of the ignition switch ON, the engine ECU controls the spill control valve to idle–up. However, it is OFF during engine starting, A/C operating and acceleration (with the vehicle speed at less than 30 km/h (19 mph) and accelerator pedal opening at 45 % or more for 5 seconds).

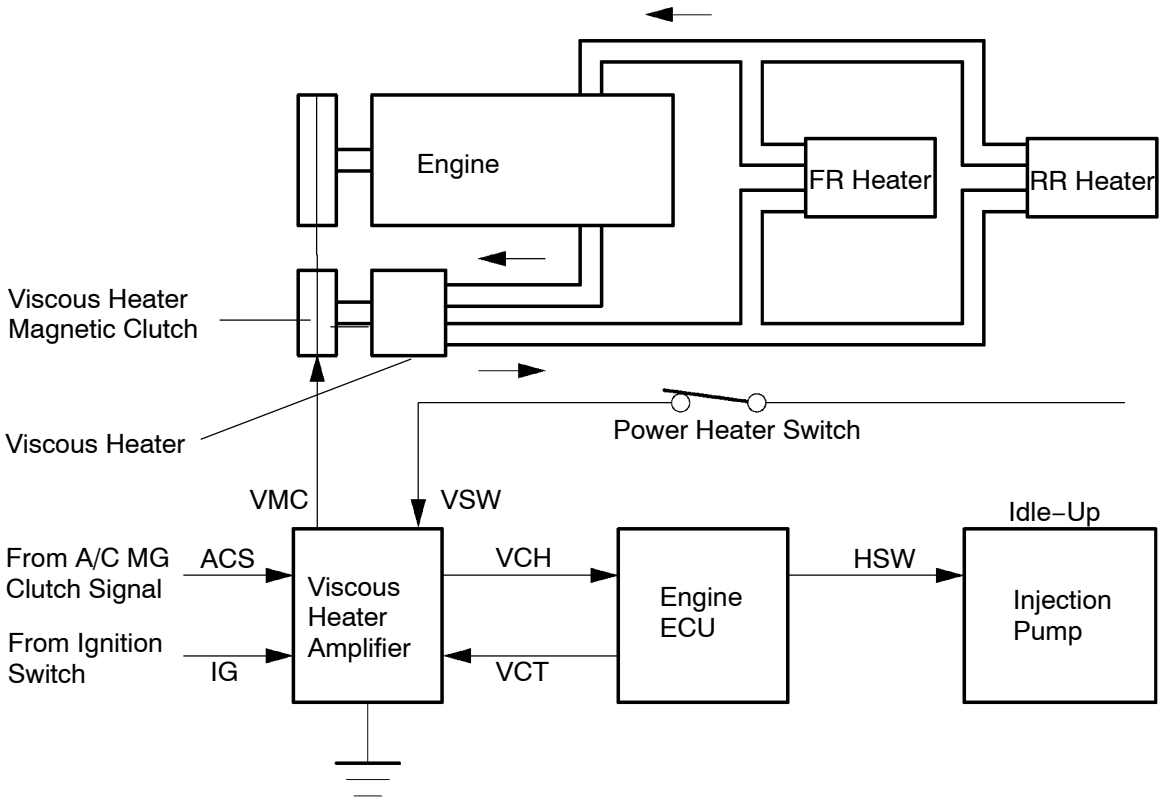

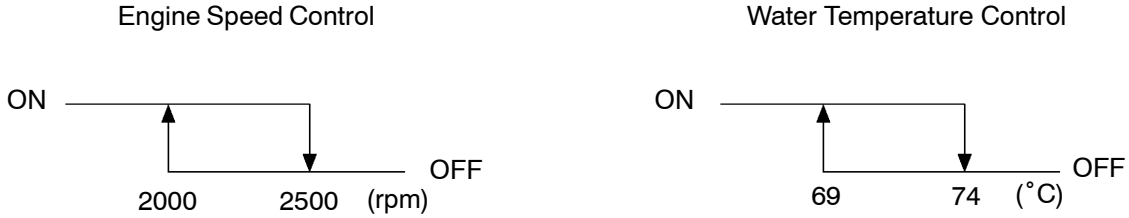

B05269
B05270 B05270

A06524

WIRING DIAGRAM

LHD

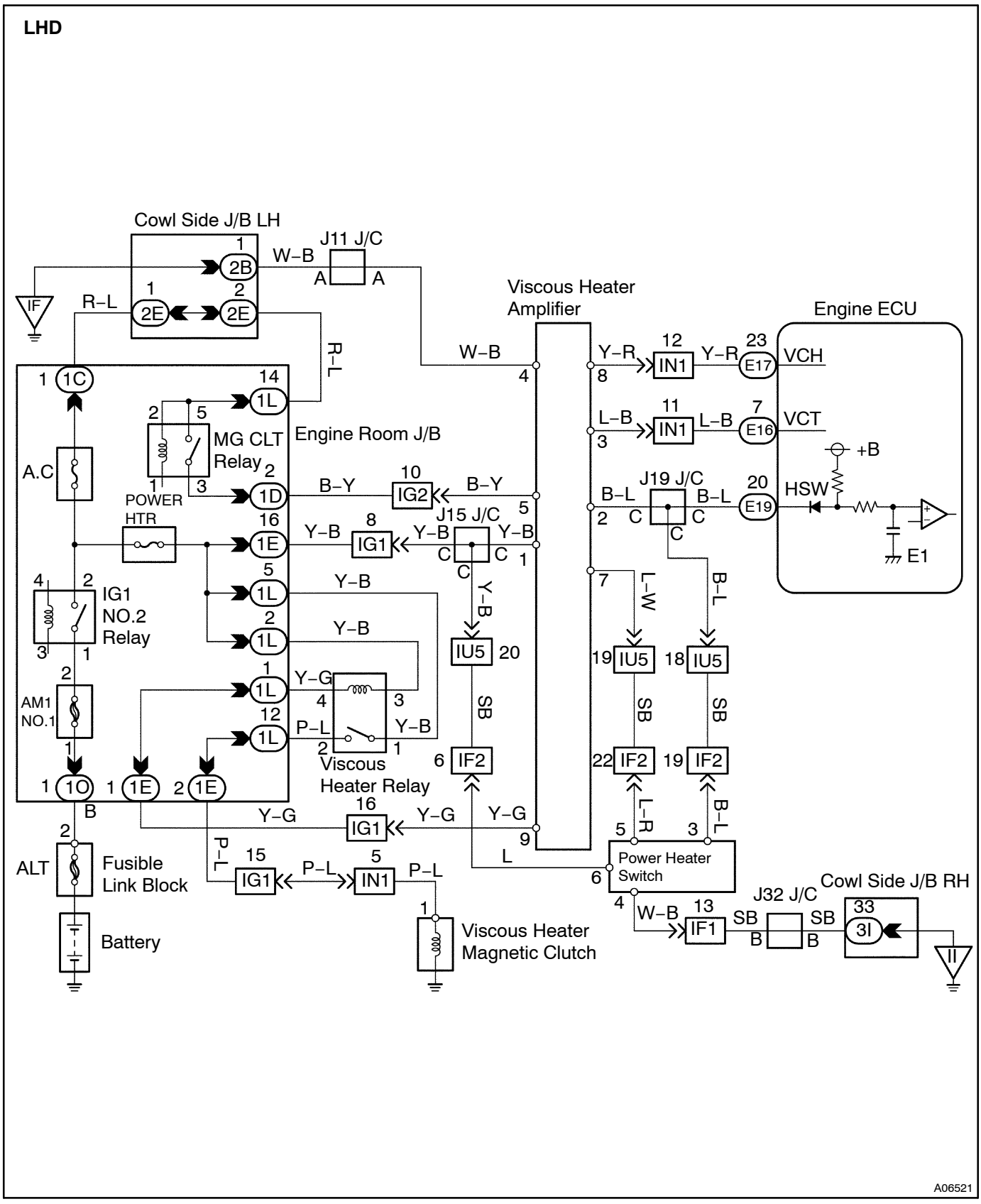

RHD

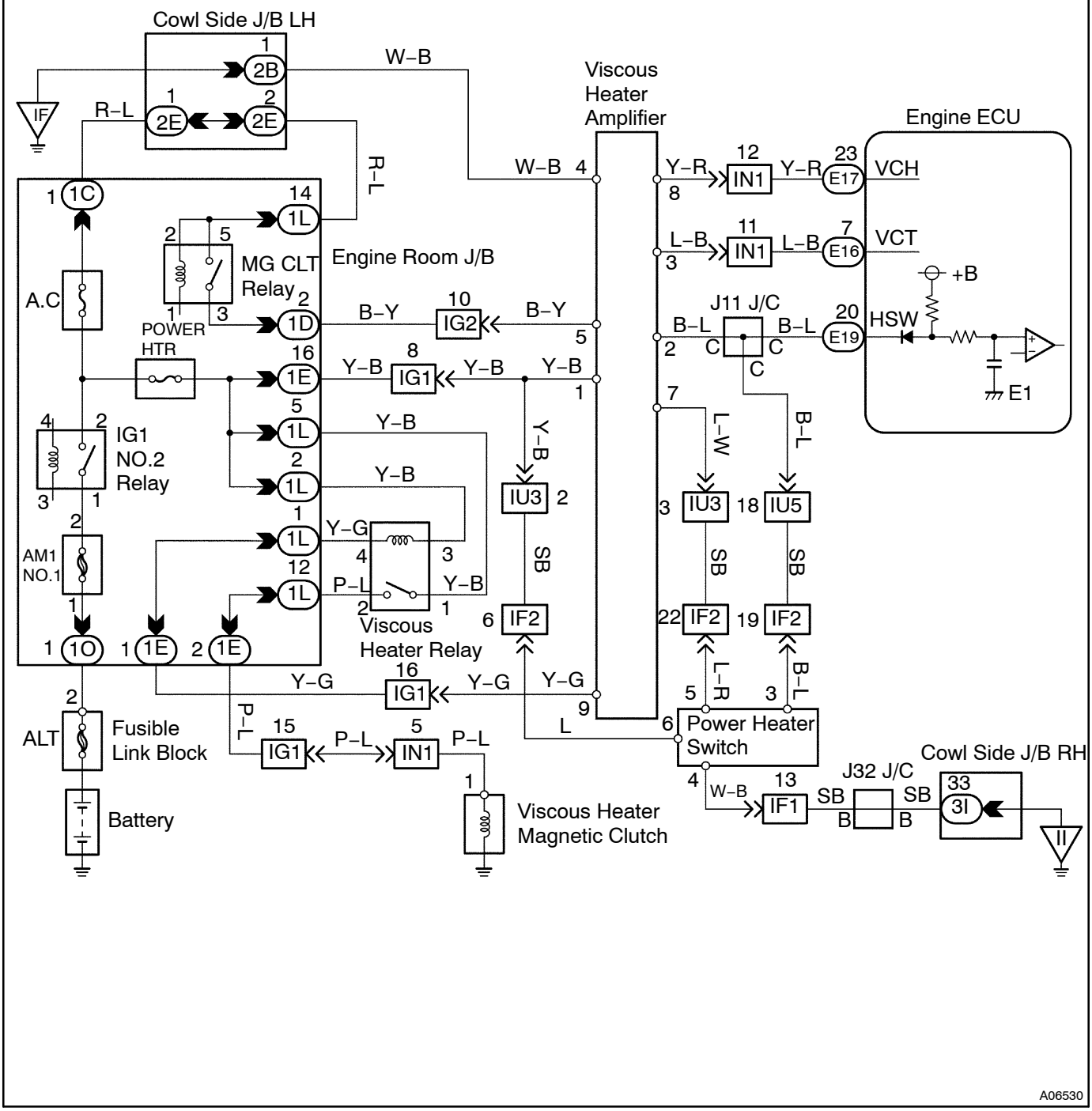
Cowl Side J/B LH
W–B
R–L
IF
Viscous
Heater
Amplifier
Engine ECU
VCH
VCT
+B
HSW
E1
Y–R
L–B
B–L
J11 J/C
MG CLT
Relay
Engine Room J/B
A.C
POWER
HTR
B–Y
Y–B
IG1
IG2
IG1
NO.2
Relay
AM1
NO.1
Y–G
P–L
Viscous
Heater Relay
IU3
IU5
IF2
L–W
SB
L–R
Power Heater
Switch
ALT
Fusible
Link Block
Battery
Viscous Heater
Magnetic Clutch
IF1
J32 J/C
Cowl Side J/B RH
3I
II
A06530

INSPECTION PROCEDURE

1	**Check power heater switch.**

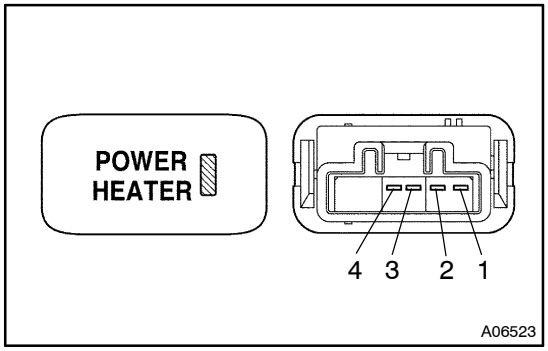

PREPARATION:
(a) Remove the lower finish panel.
(b) Remove the power heater switch.

CHECK:
Check continuity between each terminal.

Switch position	Tester connection	Specified condition
OFF	3 – 4	No continuity
ON	3 – 4	Continuity
Illumination circuit	1 – 2	Continuity

NG → **Replace power heater switch.**

OK

2	**A/C Cut Control Circuit (See page DI–96).**

NG → **Check and replace A/C amplifier.**

OK

3	**Check voltage between terminal VCH of engine ECU and body ground.**

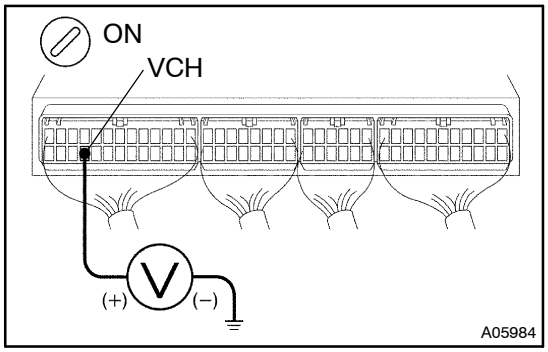

PREPARATION:
(a) Remove the glove compartment door.
(b) Turn the ignition switch ON.

CHECK:
Measure voltage between terminal VCH of engine ECU connector and body ground when heater blower switch is turned to OFF and ON.

OK:

Heater blower switch condition	Voltage
OFF	9 – 14 V
ON	0 – 3 V

OK → **Go to step 5.**

NG

4	**Check for open and short in harness and connector between engine ECU and viscous heater amplifier (See page IN–19)**

NG → **Repair or replace harness or connector.**

OK

Check and replace viscous heater amplifier.

5	**Check voltage between terminal VCT of engine ECU and body ground.**

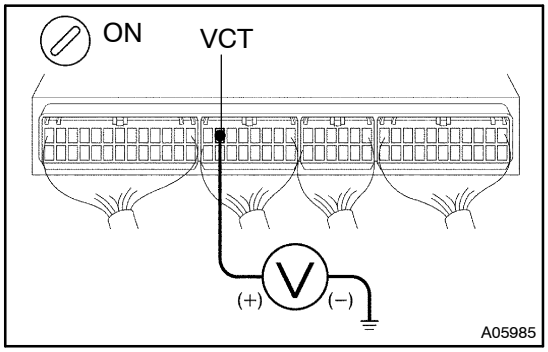

PREPARATION:

(a) Remove the glove compartment door.

(b) Turn the ignition switch ON.

CHECK:

Measure voltage between terminal VCT of engine ECU connector and body ground when heater blower switch is turned to OFF and ON.

OK:

Heater blower switch condition	Voltage
OFF	9 – 14 V
ON	0 – 3 V

OK → **Check and replace engine ECU (See page IN–19).**

NG

6	**Check for open and short in harness and connector between engine ECU and viscous heater amplifier (See page IN–19).**

NG → **Repair or replace harness or connector.**

OK

7	Check voltage between terminal HSW of engine ECU and body ground.

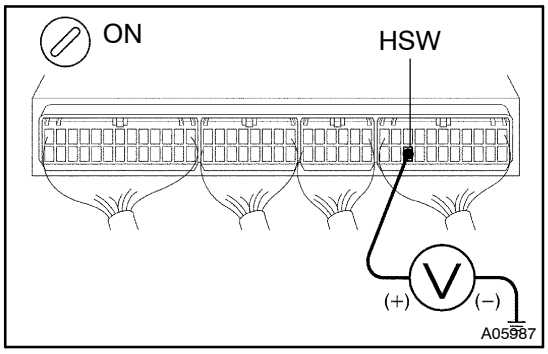

PREPARATION:

(a) Remove the glove compartment door.

(b) Turn the ignition switch ON.

CHECK:

Measure voltage between terminal HSW of engine ECU connector and body ground when power heater switch is pushed to OFF and ON.

OK:

Power heater switch condition	Voltage
OFF	9 – 14 V
ON	0 – 3 V

OK → **Check and replace engine ECU (See page IN–19).**

NG

8	Check for open and short in harness and connector between injection pump and viscous heater amplifier (See page IN–19).

NG → **Repair or replace harness or connector.**

OK

Check and replace injection pump (See page FU–113).