COMPRESSION

EM0VZ–01

INSPECTION

HINT:

If there is lack of power, excessive oil consumption or poor fuel economy, measure the compression pressure.

1. WARM UP AND STOP ENGINE

Allow the engine to warm up to normal operating temperature.

2. REMOVE INTAKE PIPE ASSEMBLY

1HZ, 1HD–T: (See page EM–48)

1HD–FTE: (See page EM–77)

3. 1HD–FTE:

REMOVE NO.2 CYLINDER HEAD COVER

(See page EM–77)

4. 1HD–FTE:

REMOVE NO.1 CYLINDER HEAD COVER

(See page EM–77)

5. 1HZ, 1HD–T:

REMOVE CYLINDER HEAD COVER

(See page EM–48)

6. REMOVE INJECTION PIPES

1HZ, 1HD–T: (See page FU–7)

1HD–FTE: (See page FU–33)

7. REMOVE NOZZLE LEAKAGE PIPE

1HZ, 1HD–T: (See page EM–48)

1HD–FTE: (See page EM–48)

8. DISCONNECT INJECTION PUMP (FUEL CUT SOLENOID) CONNECTOR

9. CHECK CYLINDER COMPRESSION PRESSURE

NOTICE:

When measuring the compression pressure of each, the other 5 injection nozzles must be installed in the cylinder head.

(a) Remove the injection nozzle.

1HZ: (See page FU–7)

1HD–T: (See page FU–17)

1HD FTE: (See page FU–33)

1HD–FTE:

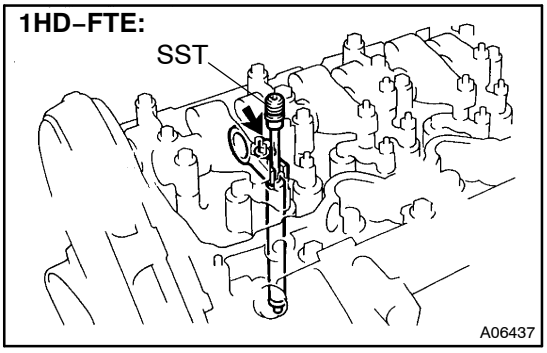

1HZ, 1HD–T:

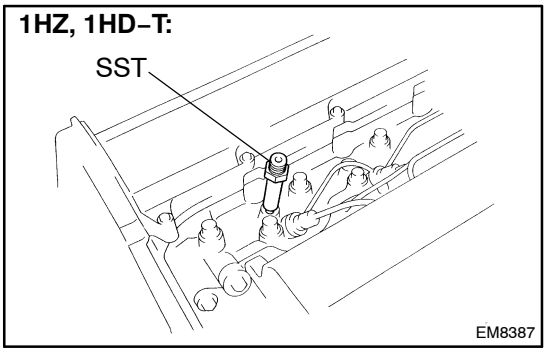

(b) Install the gasket and SST (attachment) to the injection nozzle hole with the nozzle holder clamp and bolt.
SST 09992–00400
Torque: 25 N·m (255 kgf·cm, 18 ft·lbf)

1HD–FTE:

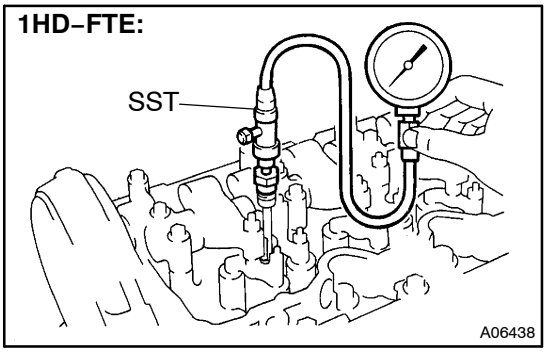

1HZ, 1HD–T:

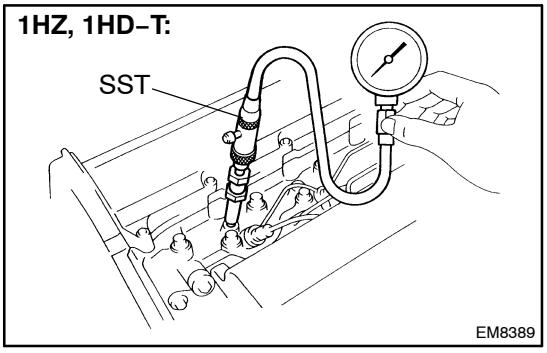

(c) Connect SST (compression gauge) to the SST (attachment).
SST 09992–00025 (09992–00160)

(d) While cranking the engine, measure the compression pressure.

HINT:
Always use a fully charged battery to obtain engine revolution of 250 rpm or more.

(e) Repeat steps (b) through (d) for each cylinder.

NOTICE:
This measurement must be done in as short a time as possible.

Compression pressure:
STD:
1HZ:
3,628 kPa (37.0 kgf/cm^2, 526 psi) or more
1HD–T, 1HD–FTE:
3,432 kPa (35.0 kgf/cm^2, 498 psi) or more
Minimum pressure:
1HZ:
2,648 kPa (27.0 kgf/cm^2, 384 psi)
1HD–T, 1HD–FTE:
2,452 kPa (25.0 kgf/cm^2, 356 psi)
Difference between each cylinder:
490 kPa (5.0 kgf/cm^2, 71 psi) or less

(f) If the cylinder compression in one or more cylinders is low, pour a small amount of engine oil into the cylinder through the injection nozzle hole and repeat steps (b) through (d) for the cylinder with low compression.

- If adding oil helps the compression, chances are that the piston rings and or cylinder bore are worn or damaged.
- If pressure stays low, a valve may be sticking or seating improperly, or there may be leakage past the gasket.

(g) Remove the SST.
SST 09992–00400, 09992–00025 (09992–00160)

(h) Reinstall the injection nozzle.
1HZ: (See page FU–13)
1HD–T: (See page FU–30)
1HD–FTE: (See page FU–44)

10. RECONNECT INJECTION PUMP (FUEL CUT SOLENOID) CONNECTOR

11. REINSTALL NOZZLE LEAKAGE PIPE
1HZ, 1HD–T: (See page EM–66)
1HD–FTE: (See page EM–94)

12. REINSTALL INJECTION PIPES
1HZ, 1HD–T: (See page FU–13)
1HD–FTE: (See page FU–44)

13. 1HZ, 1HD–T:
REINSTALL CYLINDER HEAD COVER
(See page EM–66)

14. 1HD–FTE:
REINSTALL NO.1 CYLINDER HEAD COVER
(See page EM–94)

15. 1HD–FTE:
REINSTALL NO.2 CYLINDER HEAD COVER
(See page EM–94)

16. REINSTALL INTAKE PIPE ASSEMBLY
1HZ, 1HD–T: (See page EM–66)
1HD–FTE: (See page EM–94)

17. START ENGINE AND CHECK FOR LEAKS