VALVE CLEARANCE (1HZ, 1HD–T)

EM0W0–01

INSPECTION

1. **REMOVE INTAKE PIPE ASSEMBLY**
   (See page EM–48)
2. **REMOVE CYLINDER HEAD COVER**
   (See page EM–77)

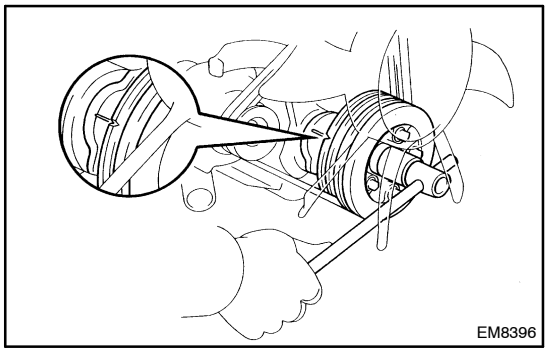

3. **SET NO.1 CYLINDER TO TDC/COMPRESSION**

(a) Turn crankshaft pulley clockwise, and align its groove with the timing gear cover groove.

(b) Check that the valve lifters on the No.1 cylinder are loose and valve lifters on the No.6 cylinder are tight.

If not, turn the crankshaft one revolution (360°) and align the mark as above.

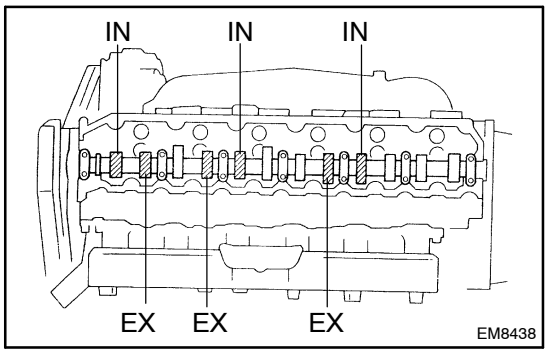

4. **INSPECT VALVE CLEARANCE**

(a) Check only those valves indicated in the illustration.

- Using a feeler gauge, measure the clearance between the valve lifter and camshaft.
- Record the out of specification valve clearance measurements. They will be used later to determine the required replacement adjusting shim.

Valve clearance (Cold):
Intake
0.15 – 0.25 mm (0.006 – 0.010 in.)
Exhaust
0.35 – 0.45 mm (0.014 – 0.018 in.)

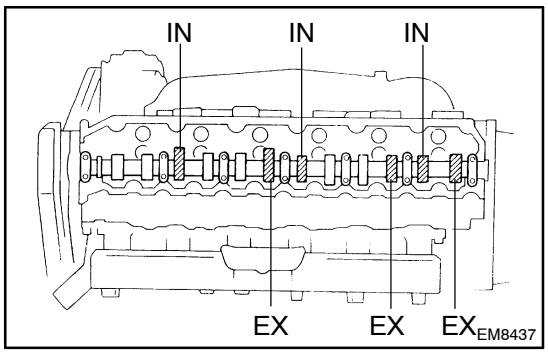

(b) Turn the crankshaft one revolution (360°) and align the mark as above (See step 3).

(c) Check only the valves indicated in the illustration. Measure the valve clearance (See step 3).

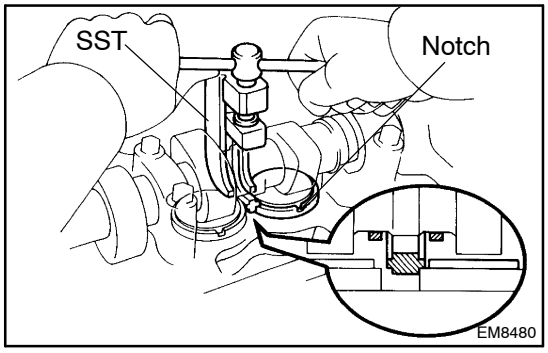

(d) Remove the adjusting shim.
- Turn the crankshaft to position the cam lobe of the camshaft on the adjusting valve upward.
- Using SST press down the valve lifter.

SST 09248–64011

HINT:
Before pressing down the valve lifter position the notch on the exhaust manifold side.

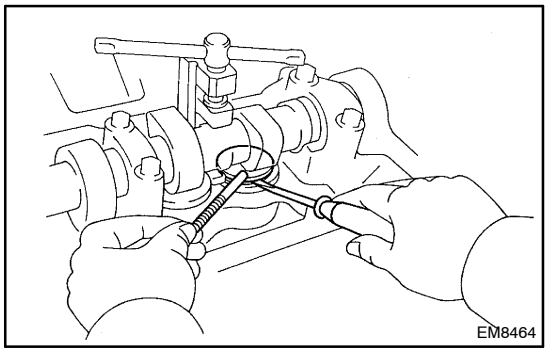

- Remove the adjusting shim with a small screwdriver and magnetic finger.

(e) Determine the replacement adjusting shim size by using following (Formula or Charts).
- Using a micrometer measure the thickness of the removed shim.
- Calculate the thickness of the new shim so the valve clearance comes within specified valve.

T..... Thickness of used shim
A..... Measured valve clearance
N..... Thickness of new shim

Intake: N = T + (A – 0.20 mm (0.008 in.))
Exhaust: N = T + (A – 0.40 mm (0.016 in.))

- Select a new shim with a thickness as close as possible to the calculated values.

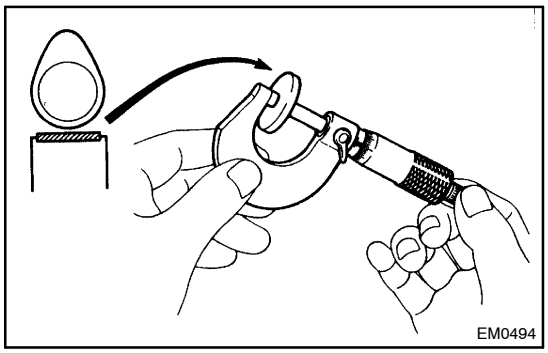

HINT:
Shims are available in twenty sizes in increments of 0.05 mm (0.0020 in.) from 2.35 mm (0.0925 in.) to 3.30 mm (0.1299 in.)

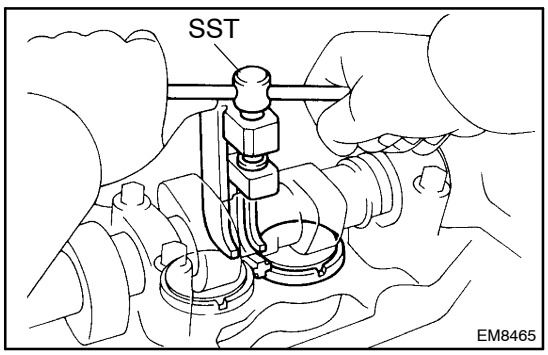

(f) Install a new adjusting shim.
- Place a new adjusting shim on the valve lifter.
- Remove SST.

SST 09248–64011

(g) Recheck the valve clearance.

5. REINSTALL CYLINDER HEAD COVER
(See page EM–66)

6. REINSTALL INTAKE PIPE ASSEMBLY
(See page EM–66)

Adjusting Shim Selection Using Chart (Intake)

Measured clearance mm (in.) \ Installed shim thickness mm (in.)	2.340 (0.0921)	2.350 (0.0925)	2.360 (0.0929)	2.380 (0.0937)	2.400 (0.0945)	2.420 (0.0953)	2.440 (0.0961)	2.450 (0.0965)	2.480 (0.0976)	2.500 (0.0984)	2.520 (0.0992)	2.540 (0.1000)	2.550 (0.1004)	2.560 (0.1008)	2.580 (0.1016)	2.600 (0.1024)	2.620 (0.1031)	2.640 (0.1039)	2.650 (0.1043)	2.660 (0.1047)	2.680 (0.1055)	2.700 (0.1063)	2.720 (0.1071)	2.740 (0.1079)	2.750 (0.1083)	2.760 (0.1087)	2.780 (0.1094)	2.800 (0.1102)	2.820 (0.1110)	2.840 (0.1118)	2.850 (0.1122)	2.860 (0.1126)	2.880 (0.1134)	2.900 (0.1142)	2.920 (0.1150)	2.940 (0.1157)	2.950 (0.1161)	2.960 (0.1165)	2.980 (0.1173)	3.000 (0.1181)	3.020 (0.1189)	3.040 (0.1197)	3.050 (0.1201)	3.060 (0.1205)	3.080 (0.1213)	3.100 (0.1220)	3.120 (0.1228)	3.140 (0.1236)	3.150 (0.1240)	3.160 (0.1244)	3.180 (0.1252)	3.200 (0.1260)	3.220 (0.1268)	3.240 (0.1276)	3.250 (0.1280)	3.260 (0.1283)	3.280 (0.1291)	3.300 (0.1299)
0.000 – 0.020 (0.0000 – 0.0008)										709	709	709	709	709	704	704	710	710	710	710	01	01	42	42	42	42	06	06	43	43	43	11	11	44	44	44	16	16	45	45	45	45	21	21	46	46	46	26	26	47	47	47	31	31
0.021 – 0.040 (0.0008 – 0.0016)									709	709	709	709	704	704	704	710	710	710	01	01	01	01	42	42	42	06	06	06	43	43	43	11	11	11	44	44	44	16	16	16	45	45	45	21	21	21	46	46	46	26	26	26	47	47	47	31	31	31
0.041 – 0.060 (0.0016 – 0.0024)								709	709	709	709	704	704	704	710	710	710	01	01	01	01	42	42	42	06	06	06	43	43	43	11	11	11	44	44	44	16	16	16	45	45	45	21	21	21	46	46	46	26	26	26	47	47	47	31	31	31
0.061 – 0.080 (0.0024 – 0.0031)							709	709	709	709	709	704	704	704	710	710	710	01	01	01	01	42	42	42	06	06	06	43	43	43	11	11	11	44	44	44	16	16	16	45	45	45	21	21	21	46	46	46	26	26	26	47	47	47	31	31	31	48	48
0.081 – 0.100 (0.0032 – 0.0039)						709	709	709	709	709	709	704	704	710	710	710	710	01	01	42	42	42	42	42	06	06	43	43	43	43	11	11	11	44	44	44	44	16	16	16	45	45	45	21	21	21	46	46	46	46	26	26	26	47	47	47	47	31	31	48	48	48
0.101 – 0.120 (0.0040 – 0.0047)					709	709	709	709	709	709	704	704	710	710	710	710	01	01	42	42	42	42	06	06	43	43	43	43	11	11	11	44	44	44	44	16	16	16	45	45	45	21	21	21	46	46	46	46	26	26	26	47	47	47	47	31	31	48	48	48	36
0.121 – 0.140 (0.0048 – 0.0055)				709	709	709	709	709	704	704	704	710	710	710	01	01	01	42	42	42	06	06	06	43	43	43	11	11	11	44	44	44	44	16	16	16	45	45	45	21	21	21	46	46	46	46	26	26	26	47	47	47	47	31	31	48	48	48	36	36
0.141 – 0.149 (0.0056 – 0.0059)			709	709	709	709	709	704	704	704	704	710	710	01	01	01	01	42	42	06	06	06	06	43	43	43	11	11	11	11	44	44	44	16	16	16	16	45	45	45	21	21	21	21	46	46	46	26	26	26	26	47	47	47	31	31	31	48	48	36	36	36	49
0.150 – 0.250 (0.0059 – 0.0098)									

Adjusting Shim Selection Using Chart (Exhaust)

| Measured clearance mm (in.) \ Installed shim thickness mm (in.) | 2.340 (0.0921) | 2.350 (0.0925) | 2.360 (0.0929) | 2.380 (0.0937) | 2.400 (0.0945) | 2.420 (0.0953) | 2.440 (0.0961) | 2.450 (0.0965) | 2.460 (0.0969) | 2.480 (0.0976) | 2.500 (0.0984) | 2.520 (0.0992) | 2.540 (0.1000) | 2.550 (0.1004) | 2.560 (0.1008) | 2.580 (0.1016) | 2.600 (0.1024) | 2.620 (0.1031) | 2.640 (0.1039) | 2.650 (0.1043) | 2.680 (0.1047) | 2.680 (0.1055) | 2.700 (0.1063) | 2.720 (0.1071) | 2.740 (0.1079) | 2.750 (0.1083) | 2.760 (0.1087) | 2.780 (0.1094) | 2.800 (0.1102) | 2.820 (0.1110) | 2.840 (0.1118) | 2.850 (0.1122) | 2.860 (0.1126) | 2.880 (0.1134) | 2.900 (0.1142) | 2.920 (0.1150) | 2.940 (0.1157) | 2.950 (0.1161) | 2.960 (0.1165) | 2.980 (0.1173) | 3.000 (0.1181) | 3.020 (0.1189) | 3.040 (0.1197) | 3.050 (0.1201) | 3.060 (0.1205) | 3.080 (0.1213) | 3.100 (0.1220) | 3.120 (0.1228) | 3.140 (0.1236) | 3.150 (0.1240) | 3.160 (0.1244) | 3.180 (0.1252) | 3.200 (0.1260) | 3.220 (0.1268) | 3.240 (0.1276) | 3.250 (0.1280) | 3.260 (0.1283) | 3.280 (0.1291) | 3.300 (0.1299) |
|---|---|---