EM0WW–01

REPLACEMENT

HINT:
There are 2 methods (a and b) to replace the oil seal which are as follows:

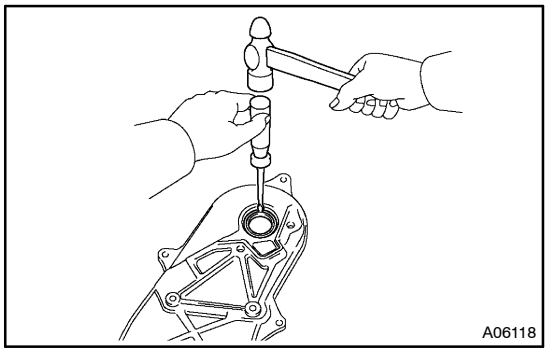

REPLACE CAMSHAFT OIL SEAL

(a) If the camshaft oil seal retainer is removed from cylinder head.
  (1) Using a screwdriver, tap out the oil seal.

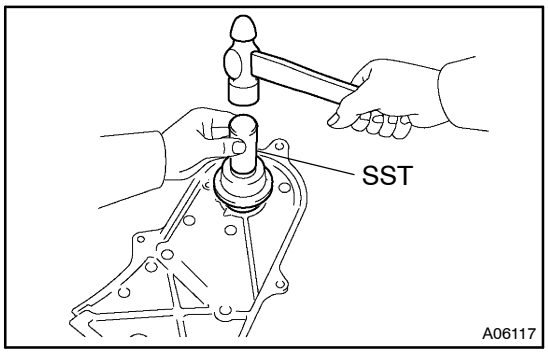

  (2) Using SST and a hammer, tap in a new oil seal until its surface is flush with the oil seal retainer edge.
  SST 09223 – 46011
  (3) Apply MP grease to the oil seal lip.

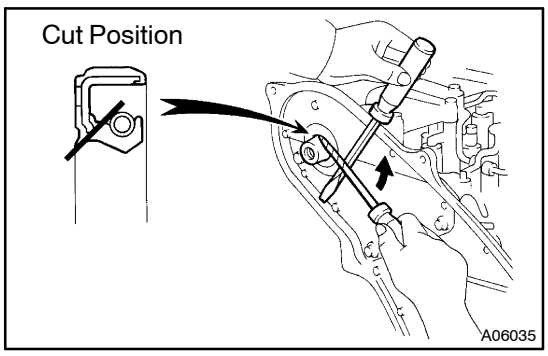

(b) If the camshaft oil seal retainer is installed to cylinder head.
  (1) Using a knife, cut off the seal lip.
  (2) Using 2 screwdrivers, pry out the oil seal.

NOTICE:
Be careful not to damage the camshaft. Tape the screwdriver tip.

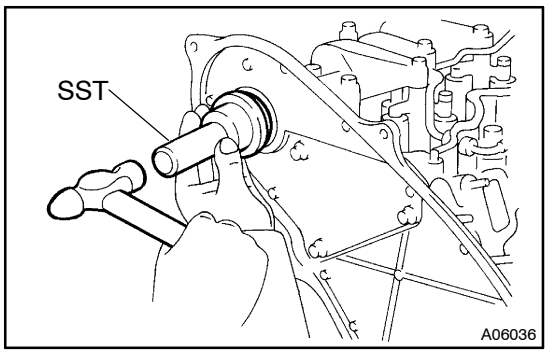

  (3) Apply MP grease to a new oil seal lip.
  (4) Using SST and a hammer, tap in the oil seal until its surface is flush with the oil seal retainer edge.
  SST 09223 – 46011