EM0WX–01

REASSEMBLY

HINT:

- Thoroughly clean all parts to be assembled.
- Before installing the parts, apply new engine oil to all sliding and rotating surfaces.
- Replace all gaskets and oil seals with new ones,

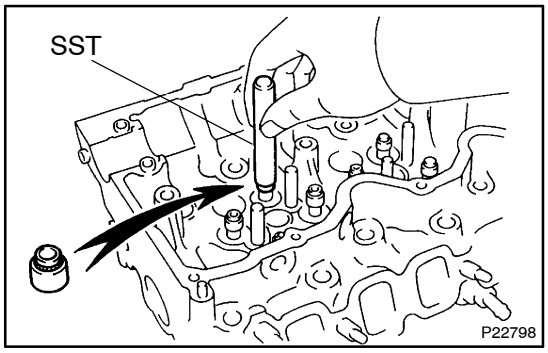

1. INSTALL VALVES

(a) Using SST, push in a new oil seal.
SST 09201–41020

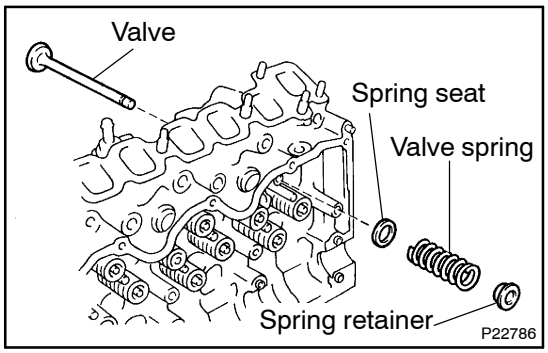

(b) Install these parts:
(1) Valve
(2) Spring seat
(3) Valve spring
(4) Spring retainer

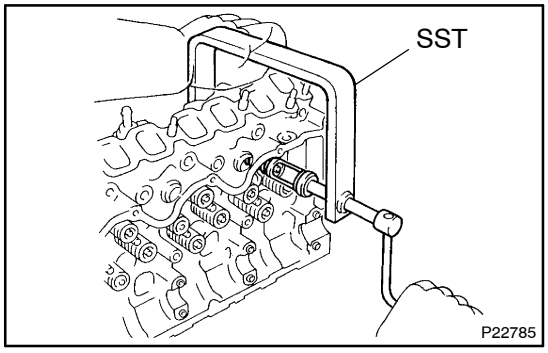

(c) Using SST, compress the valve spring and place the 2 keepers around the valve stem.
SST 09202–70020 (09202–00010)

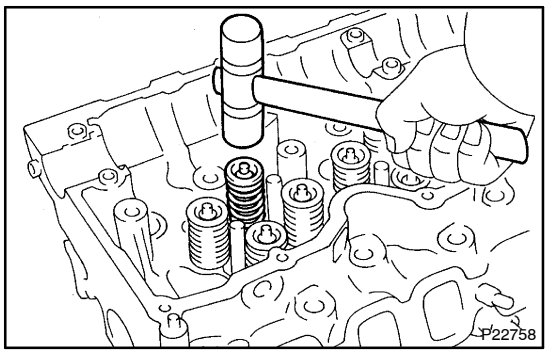

(d) Using a plastic–faced hammer, lightly tap the valve stem tip to assure a proper fit.

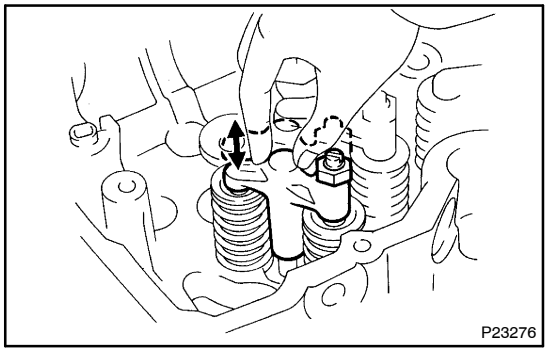

2. INSTALL VALVE BRiDGES

(a) Install the valve bridge.

(b) Check that the valve bridge rotates smoothly.

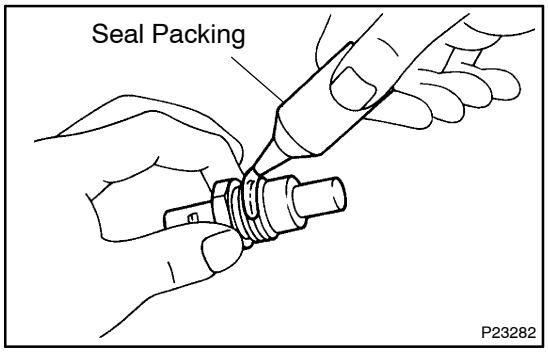

3. INSTALL WATER SENDER GAUGE

(a) Apply seal packing to 2 or 3 threads.
Seal packing: Part No. 08826–00100 or equivalent

(b) Install the sender gauge.