FUEL FILTER

FU04W–01

REPLACEMENT

1. DISCONNECT FUEL FILTER WARNING SWITCH CONNECTOR

2. DRAIN FUEL FROM FUEL FILTER

(a) Install a vinyl hose to the drain cock, and insert the other end of the vinyl hose in a container.

(b) Loosen the drain plug, and drain the fuel.

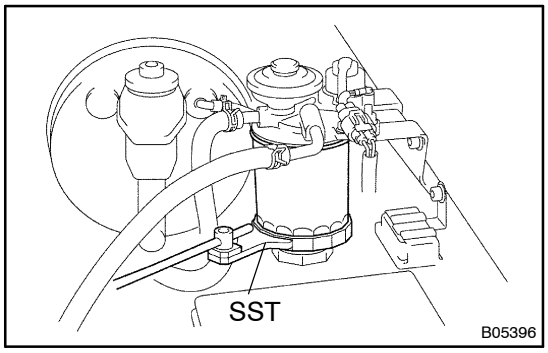

3. REPLACE FUEL FILTER

(a) Remove the fuel filter.
Using SST, remove the fuel filter.
SST 09228–64040

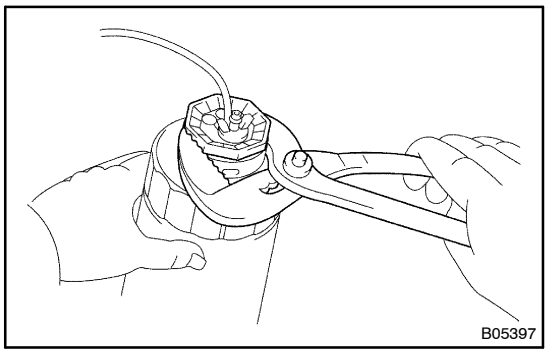

(b) Remove the fuel filter warning switch from the fuel filter.
Using pliers, remove the warning switch and O–ring.

NOTICE:

Be careful not to damage the warning switch.

(c) Install the fuel filter warning switch to new fuel filter.
(1) Install a new O–ring to the warning switch.
(2) Apply fuel to the O–ring of the warning switch.
(3) Install the warning switch to a new fuel filter by hand.

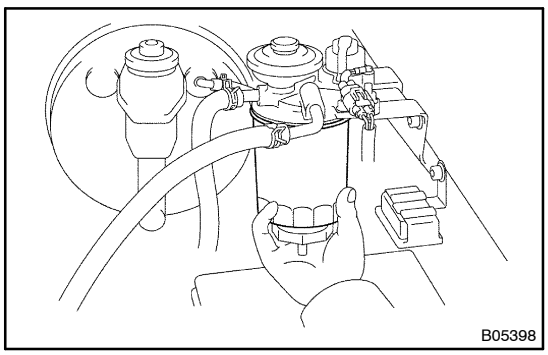

(d) Install a new fuel filter.
(1) Check and clean the fuel filter installation surface.
(2) Apply fuel to the gasket of a new fuel filter.
(3) Lightly screw the fuel filter into place, and tighten it until the gasket comes into contact with the seat.
(4) Tighten it additional 3/4 turn by hand.

4. REPLACE FUEL PREFILTER

(a) Remove the fuel prefilter assembly.
(1) Disconnect the 2 fuel hoses.
(2) Remove the 2 nuts and fuel prefilter assembly from the bracket.

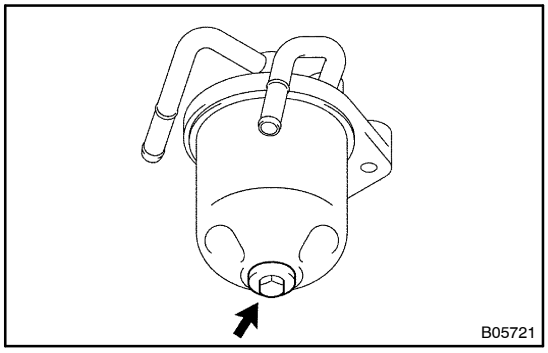

(b) Remove the fuel prefilter.
  (1) Remove the bolt and gasket.
  (2) Remove the upper body from the lower body.
  (3) Remove the gasket from the upper body.
  (4) Remove the filter, 2 gaskets, spring plate and spring.

(c) Install a new prefilter.
  (1) Install a new gasket to the upper body.
  (2) Place the spring, spring plate, a new filter, 2 new gaskets and the upper body to the lower body.
  (3) Install a new gasket and the bolt.

Torque: 16.7 N·m (170 kgf·cm, 12 ft·lbf)

(d) Install the fuel prefilter assembly.
  (1) Install the fuel prefilter with the 2 nuts.

Torque: 18 N·m (185 kgf·cm, 13 ft·lbf)

  (2) Connect the 2 fuel hoses.

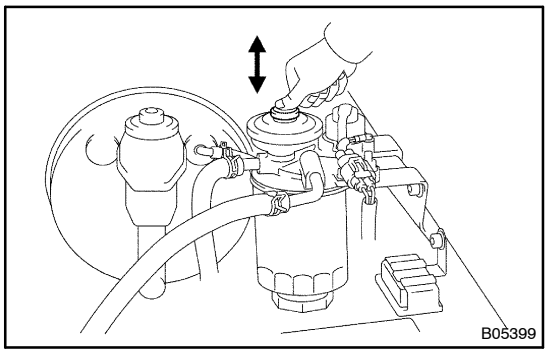

5. FILL FUEL FILTER WITH FUEL

Operate the hand pump until you feel more resistance.

6. CONNECT FUEL FILTER WARNING SWITCH CONNECTOR

7. START ENGINE AND CHECK FOR FUEL LEAKS