INJECTION NOZZLE (1HZ)

COMPONENTS

FU04Y–01

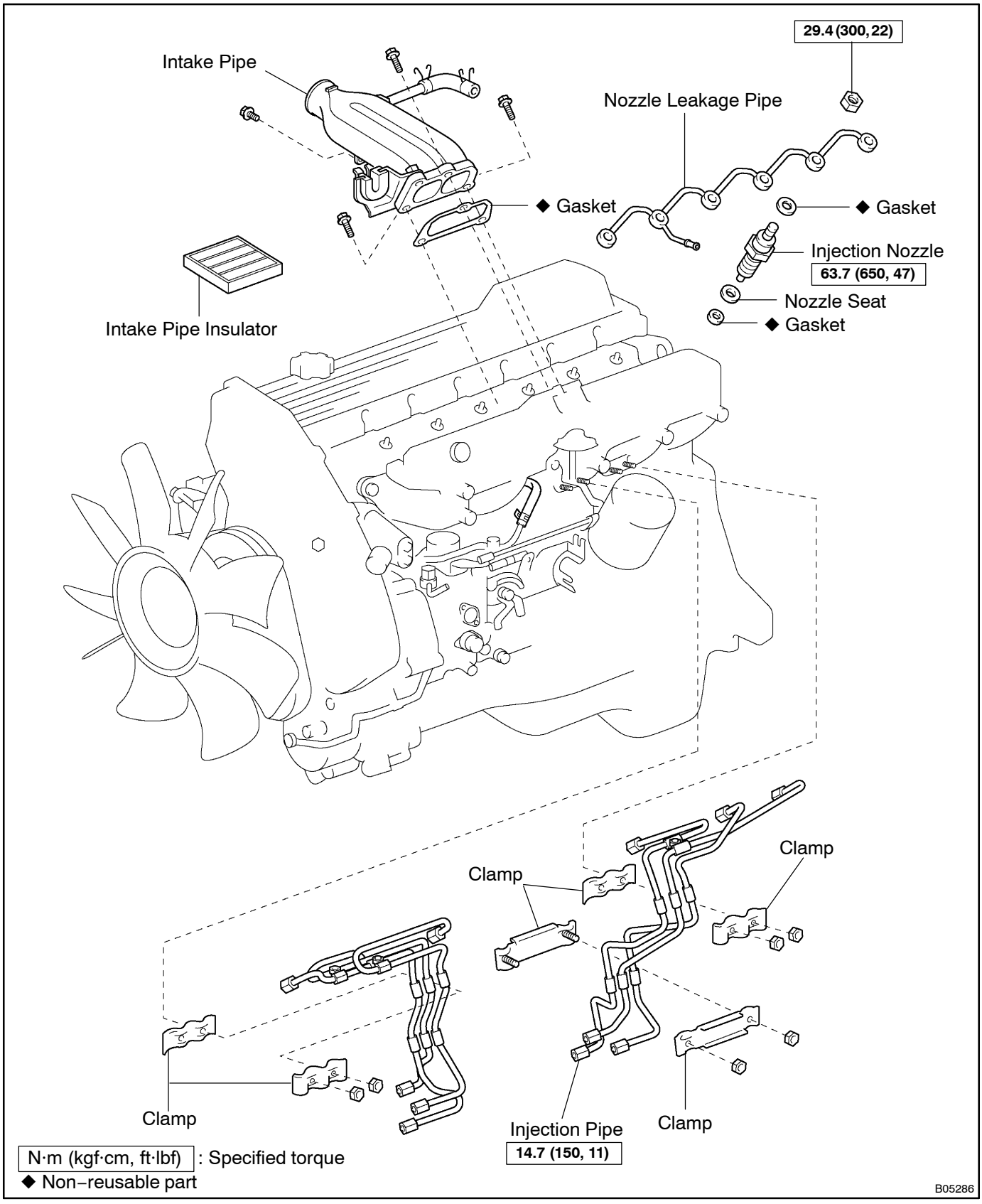

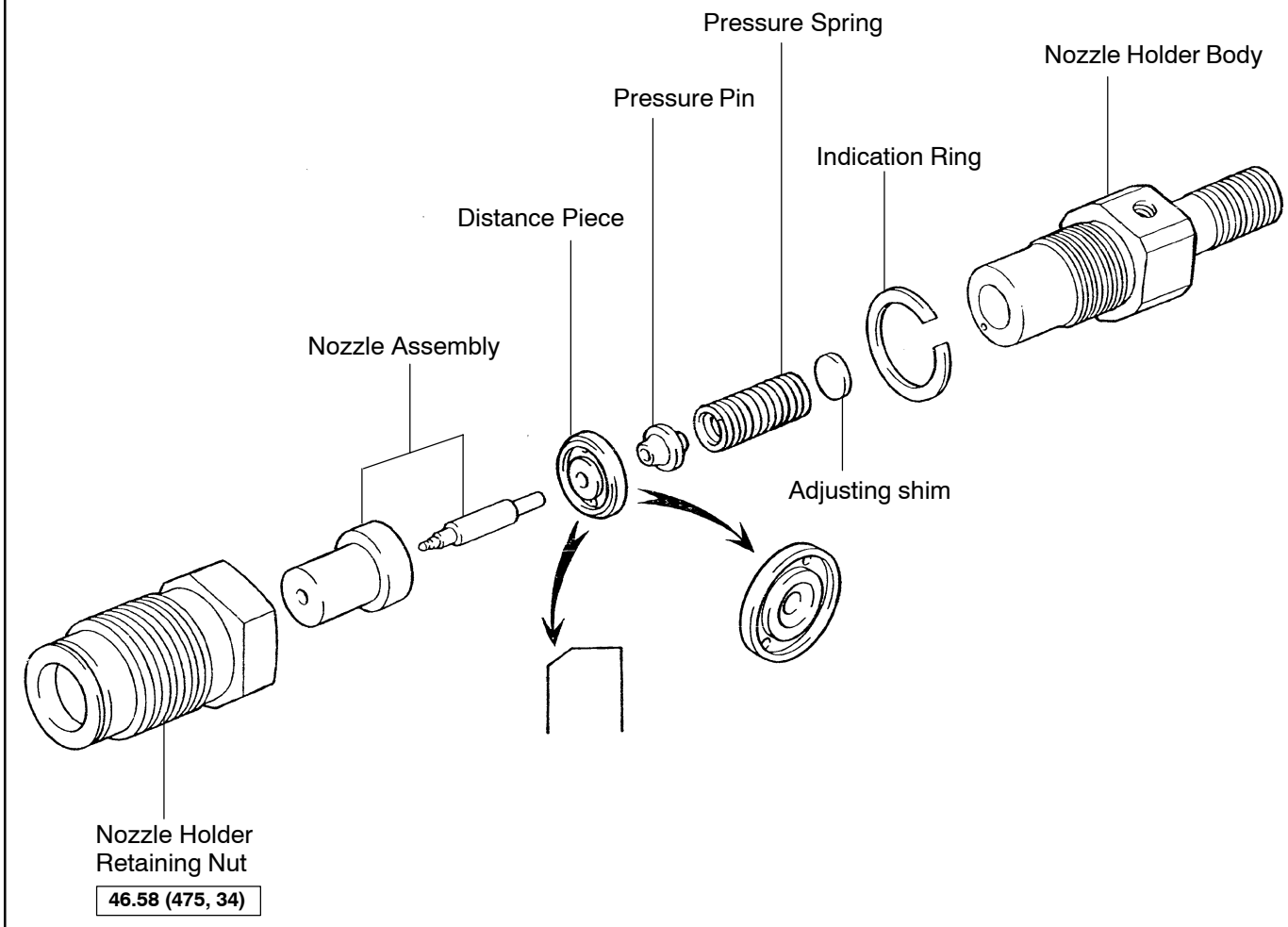

N·m (kgf·cm, ft·lbf) : Specified torque

P25610