FU04Z–01

REMOVAL

1. REMOVE INTAKE PIPE (See page EM–48)

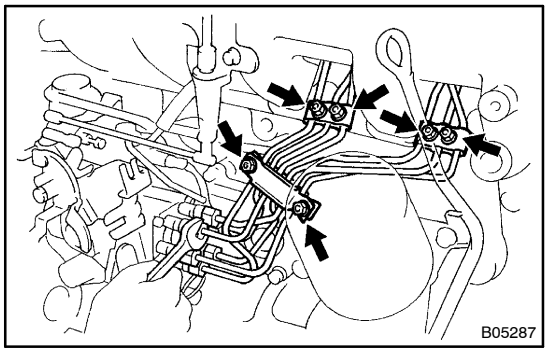

2. REMOVE INJECTION PIPES

(a) Remove the 4 nuts and 2 clamps from the intake manifold.
(b) Remove the 2 nuts and 2 clamps.
(c) Loosen the 6 union nuts of the injection pipes from the injection pump.

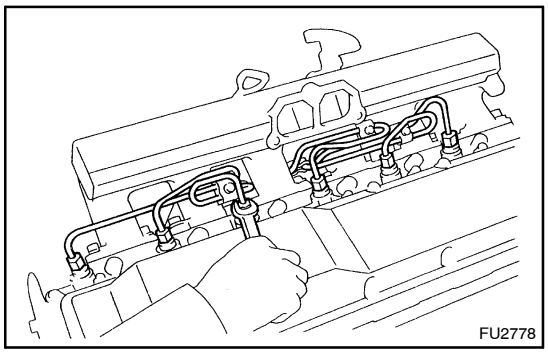

(d) Loosen the 6 union nuts of the injection pipes from the injection nozzles.
(e) Remove the 6 injection pipes.
(f) Remove the 2 injection pipe clamps.

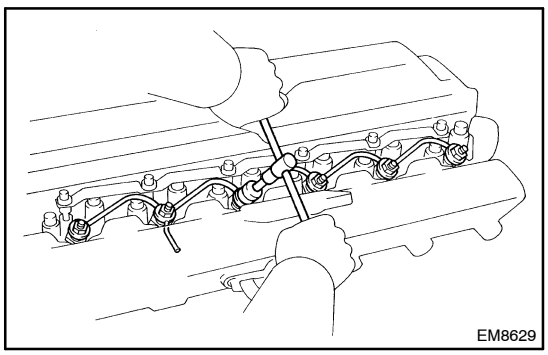

3. REMOVE NOZZLE LEAKAGE PIPE

(a) Disconnect the fuel return hose from the nozzle leakage pipe.
(b) Remove the 6 nuts, nozzle leakage pipe and 6 gaskets.

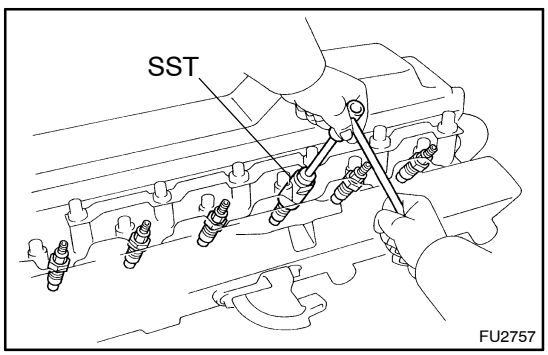

4. REMOVE INJECTION NOZZLES

Using SST, remove the 6 injection nozzles, 6 seats and 6 gaskets.

SST 09268–64010 (09268–64020)

HINT:
Arrange the injection nozzles in correct order.