FU00R–02

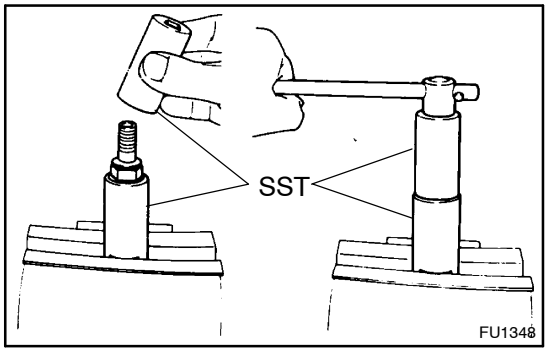

DISASSEMBLY

DISASSEMBLE INJECTION NOZZLES

(a) Using SST, remove the nozzle holder body.
SST 09268–64010 (09268–64020, 09268–64030)

NOTICE:

When disassembling the nozzle, be careful not to drop the inner parts.

(b) Remove the pressure spring, shim, pressure pin, distance piece, nozzle assembly and identification ring.