FU050–01

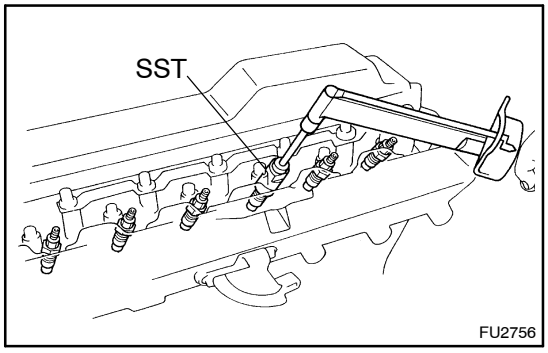

INSTALLATION

1. INSTALL INJECTION NOZZLES

(a) Place 6 new gaskets and the 6 nozzle seats into the injection nozzle holes of the cylinder head.

(b) Using SST, install the 6 injection nozzles.
SST 09268–64010 (09268–64020)
Torque: 63.7 N·m (650 kgf·cm, 47 ft·lbf)

HINT:

Australia A/T:

Install the injection nozzle either with the combination (A) or (B).

(A)

Cylinder	Indication ring
1, 2 and 3	White
4, 5 and 6	Brown

(B)

Cylinder	Indication ring
1, 2 and 3	Brown
4, 5 and 6	White

NOTICE:

Over torquing could cause nozzle deformation and needle adhesion or other defects.

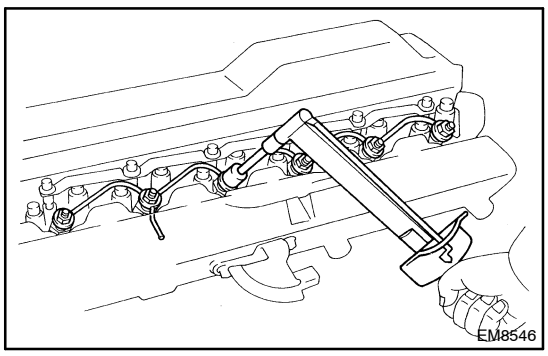

2. INSTALL NOZZLE LEAKAGE PIPE

(a) Install 6 new gaskets and the leakage pipe with the 6 nuts.
Torque: 29.4 N·m (300 kgf·cm, 22 ft·lbf)

(b) Connect the fuel return hose to the leakage pipe.

3. INSTALL INJECTION PIPES

(a) Place the 2 injection pipe clamps on the intake manifold.

(b) Attach the 6 injection pipes to the injection nozzles and injection pump.

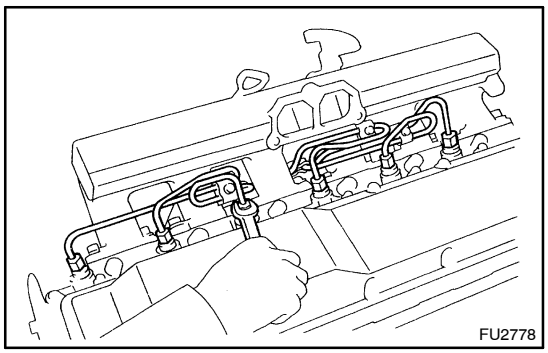

(c) Tighten the 6 union nuts to the injection nozzle.
Torque: 14.7 N·m (150 kgf·cm, 11 ft·lbf)

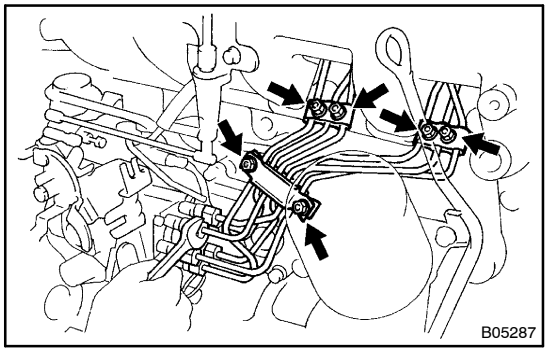

(d) Tighten the 6 union nuts to the injection pump.
Torque: 14.7 N·m (150 kgf·cm, 11 ft·lbf)

(e) install the 2 clamps with the 2 nuts
Torque: 6.4 N·m (65 kgf·cm, in.·lbf)

(f) install the 2 clamps with the 4 nuts
Torque: 6.4 N·m (65 kgf·cm, in.·lbf)

4. INSTALL INTAKE PIPE (See page EM–66)

5. START ENGINE AND CHECK FOR FUEL LEAKAGE