FU029–02

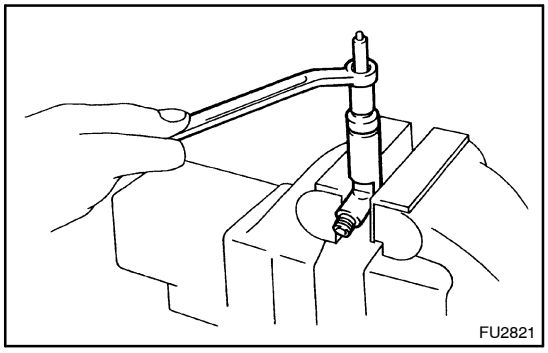

DISASSEMBLY

DISASSEMBLE INJECTION NOZZLES

(a) Remove the nozzle holder retaining nut.

NOTICE:

When disassembling the nozzle, be careful not to drop the inner parts.

(b) Disassemble the injection nozzle.