FU053–01

ADJUSTMENT

1. ADJUST PRE–LIFT

NOTICE:

pre–lift adjustment requires great precision, so when doing this operation, make sure everything is clean and that no foreign substances are trapped.

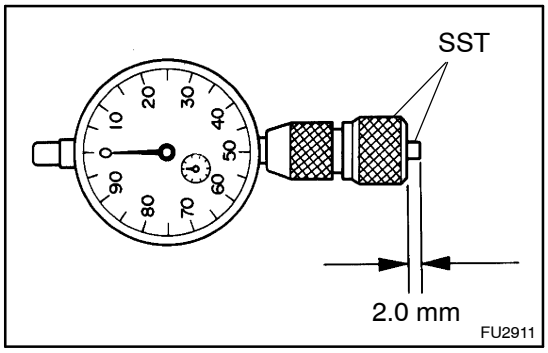

(a) Install the SST to the dial indicator so that the protrusion shown in the illustration is 2.0 mm (0.079 in.) or less.
SST 09268–17010

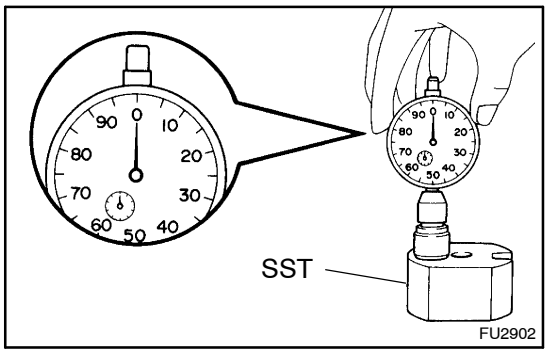

(b) Set the dial indicator scale to 0 mm (0 in.) on top of the SST or the surface plate.
SST 09268–17010

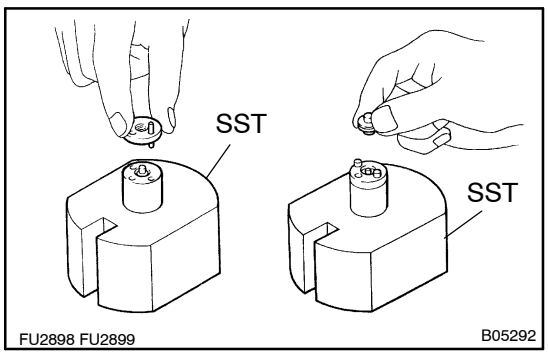

(c) Place the nozzle sub–assembly, distance piece, 2 straight pins and No.1 pressure pin on the SST as shown in the illustration.
SST 09268–17010

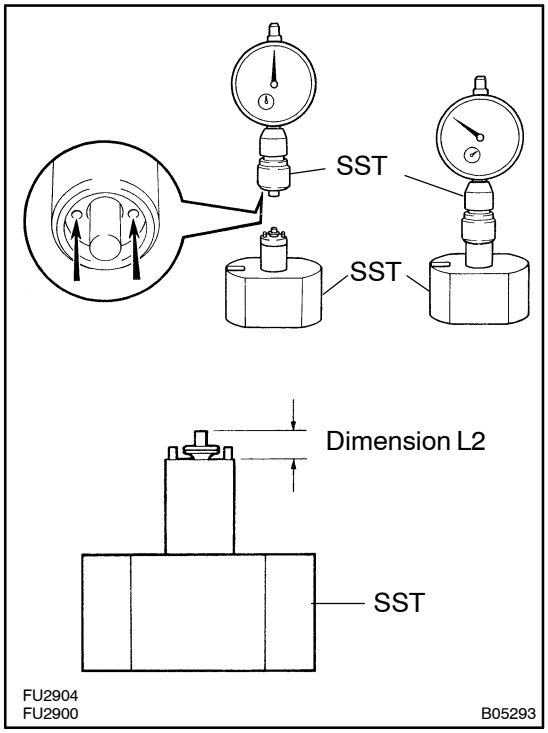

(d) Install SST holes to the straight pins and measure dimension L2.
SST 09268–17010
Dimension L2 (Reference) = 4.70 mm (0.1850 in.)

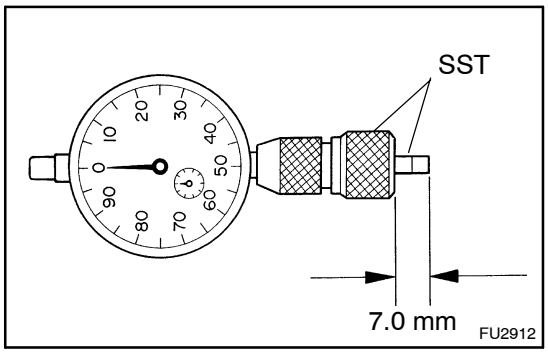

(e) Install the SST to the dial indicator so that the protrusion shown in the illustration is 7.0 mm (0.276 in.) or less.
SST 09268–17010

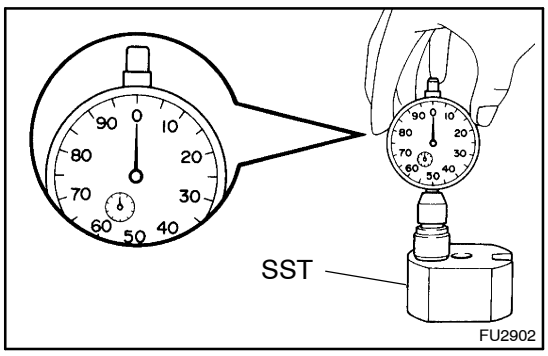

(f) Set the dial indicator scale to 0 mm (0 in.) on top of the SST or the surface plate.
SST 09268–17010

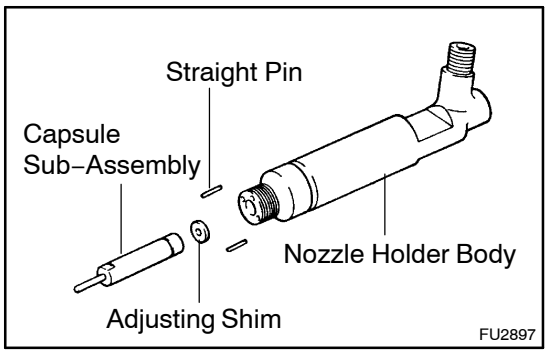

(g) Place the adjusting shim, the capsule sub–assembly and straight pins on the nozzle holder body.

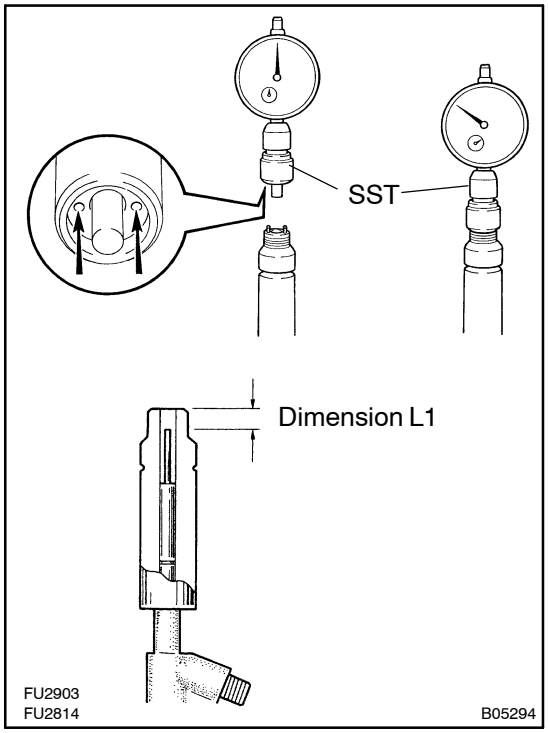

(h) Install SST holes to the straight pins and measure dimension L1.
SST 09268–17010
Dimension L1 (Reference) = 4.77 mm (0.1878 in.)

(i) Subtract the dimension L2 from the dimension L1 .
Pre–lift = L1 – L2
Pre–lift: 0.06 – 0.08 mm (0.00236 – 0.00315 in.)

If the pre–lift dimension is not as specified, change the adjusting shim on the top of the capsule sub–assembly.

Adjusting shim:

mm (in.)	mm (in.)	mm (in.)
0.700 (0.0276)	1.310 (0.0516)	1.520 (0.0598)
0.750 (0.0295)	1.320 (0.0520)	1.530 (0.0602)
0.800 (0.0315)	1.330 (0.0524)	1.540 (0.0606)
0.850 (0.0335)	1.340 (0.0528)	1.550 (0.0610)
0.900 (0.0354)	1.350 (0.0531)	1.560 (0.0614)
0.950 (0.0374)	1.360 (0.0535)	1.570 (0.0618)
0.975 (0.0384)	1.370 (0.0539)	1.580 (0.0622)
1.000 (0.0394)	1.380 (0.0543)	1.590 (0.0626)
1.025 (0.0404)	1.390 (0.0547)	1.600 (0.0630)
1.050 (0.0413)	1.400 (0.0551)	1.610 (0.0634)
1.075 (0.0423)	1.410 (0.0555)	1.620 (0.0638)
1.100 (0.0433)	1.420 (0.0559)	1.630 (0.0641)
1.125 (0.0443)	1.430 (0.0563)	1.640 (0.0646)
1.150 (0.0453)	1.440 (0.0567)	1.650 (0.0650)
1.175 (0.0463)	1.450 (0.0571)	1.660 (0.0654)
1.200 (0.0472)	1.460 (0.0575)	1.670 (0.0657)
1.225 (0.0482)	1.470 (0.0579)	1.680 (0.0661)
1.250 (0.0492)	1.480 (0.0583)	1.690 (0.0665)
1.280 (0.0504)	1.490 (0.0587)	1.700 (0.0669)
1.290 (0.0508)	1.500 (0.0591)	1.750 (0.0689)
1.300 (0.0512)	1.510 (0.0594)	1.800 (0.0709)

HINT:
If the shim is made thicker, the pre–lift is decreased.

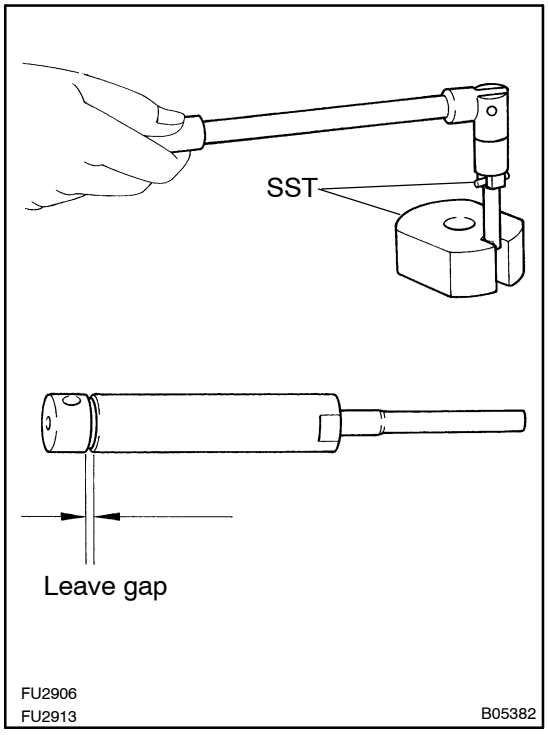

2. CHECK NO.2 OPENING PRESSURE

(a) Loosen by 1 or 2 turns the plug screw of the capsule sub–assembly with SST.
SST 09268–17010

HINT:
When the plug screw is loosened by 1 or 2 turns, the pre–lift from installation in the nozzle holder becomes 0 mm (0 in.).

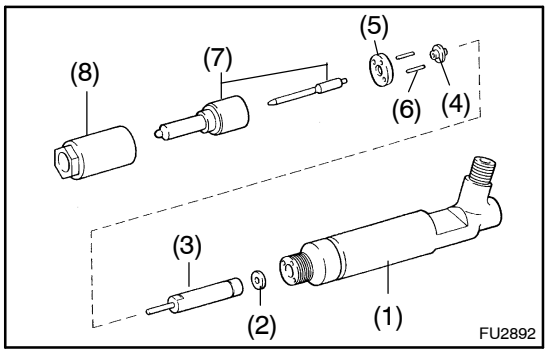

(b) Assemble these parts:
(1) Nozzle holder body
(2) Adjusting shim selected in step 1 above
(3) Capsule sub–assembly in the condition from step 2 (a)
(4) No.1 pressure pin
(5) Distance piece
(6) Straight pins
(7) Nozzle sub–assembly
(8) Retaining nut

NOTICE:
Do not assemble the No.1 pressure spring and adjusting shim for adjustment of the No.1 opening pressure.

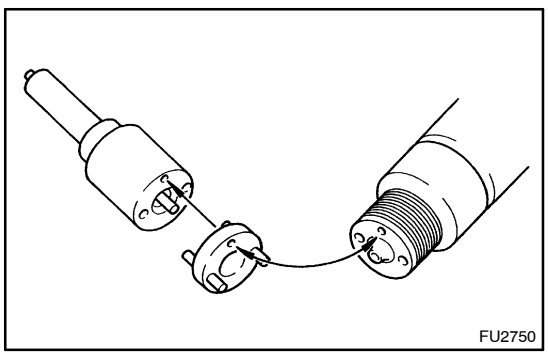

HINT:
Align the holes of the nozzle body, distance piece and nozzle holder body.

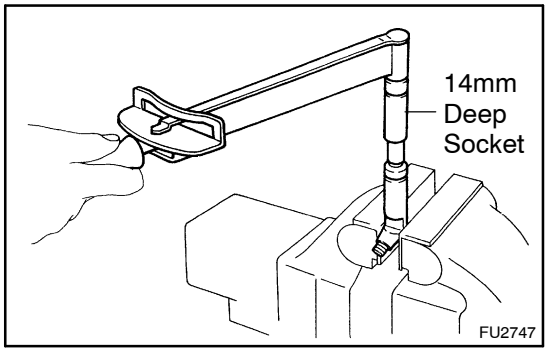

(c) Using a 14 mm deep socket wrench, torque the retaining nut.

Torque: 34.3 N·m (350 kgf·cm, 25 ft·lbf)

NOTICE:

Over torquing could cause the nozzle deformation and the needle adhesion or other defects.

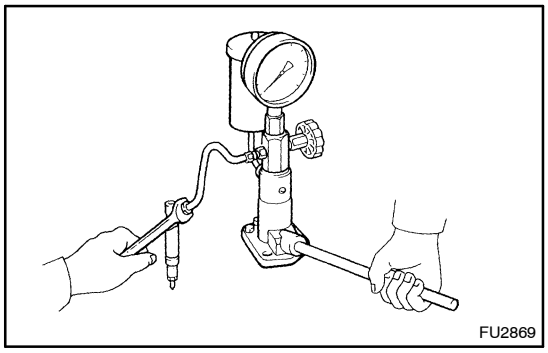

(d) Install the injection nozzle to the injection nozzle hand tester and bleed air from the union nut.

CAUTION:

Do not place your finger over the nozzle injection hole.

(e) Pump the tester handle a few times as fast as possible to discharge the carbon from the injection hole.

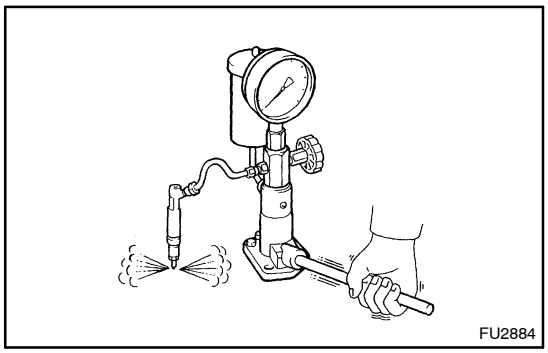

(f) Pump the tester handle slowly and observe the pressure gauge.

(g) Read the pressure gauge just as the injection pressure begins to drop.

No.2 opening pressure (Inspection pressure):
13,239 – 14,220 kPa
(135 – 145 kgf/cm^2, 1,920 – 2,062 psi)

HINT:

Proper nozzle operation can be determined by a swishing sound.

If the opening pressure is not as specified, replace the capsule sub–assembly.

HINT:

The No.2 opening pressure is already adjusted for the new capsule sub–assembly.

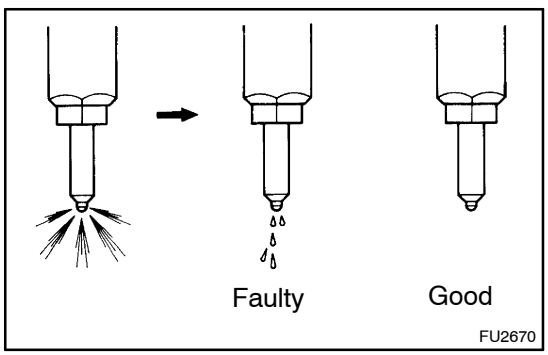

(h) There should be no dripping after injection.

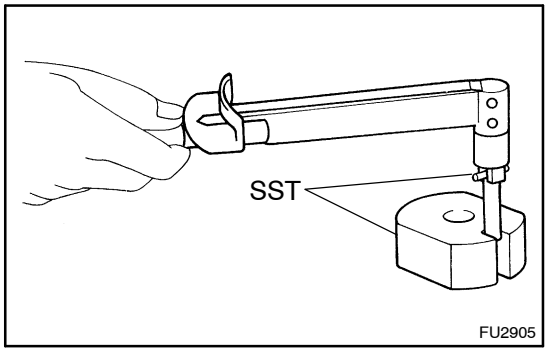

(i) After checking the No.2 opening pressure, remove the capsule sub–assembly and tighten the plug screw with SST.
SST 09268–17010
Torque: 2.5 N·m (25 kgf·cm, 21 in.·lbf)

3. ADJUST NO.1 OPENING PRESSURE

(a) Assemble the nozzle holder body, adjusting shim selected in step 1, the capsule sub–assembly, adjusting shim for adjustment of No.1 opening pressure, No.1 pressure spring, No.1 pressure pin, distance piece, 2 straight pins and nozzle sub–assembly, and finger tighten the retainer nut.

HINT:

- Align the holes of the nozzle body, distance piece and nozzle holder body.
- When the thickness of the originally used adjusting shim is not known, use a shim 1.5 mm (0.56 in.) thick instead.

(b) Read the pressure gauge just as the injection pressure begins to drop. (See Steps (c) to (g) in step 1 above)
No.1 opening pressure:
17,652 – 18,633 kPa
(180 – 190 kgf/cm^2, 2,560 – 2,702 psi)

HINT:

Proper nozzle operation can be determined by a swishing sound.

If the opening pressure is not as specified, disassemble the nozzle and change the adjusting shim on the top of the No.1 pressure spring.

Adjusting shim thickness:

mm (in.)	mm (in.)	mm (in.)
0.700 (0.0276)	1.310 (0.0516)	1.520 (0.0598)
0.750 (0.0295)	1.320 (0.0520)	1.530 (0.0602)
0.800 (0.0315)	1.330 (0.0524)	1.540 (0.0606)
0.850 (0.0335)	1.340 (0.0528)	1.550 (0.0610)
0.900 (0.0354)	1.350 (0.0531)	1.560 (0.0614)
0.950 (0.0374)	1.360 (0.0535)	1.570 (0.0618)
0.975 (0.0384)	1.370 (0.0539)	1.580 (0.0622)
1.000 (0.0394)	1.380 (0.0543)	1.590 (0.0626)
1.025 (0.0404)	1.390 (0.0547)	1.600 (0.0630)
1.050 (0.0413)	1.400 (0.0551)	1.610 (0.0634)
1.075 (0.0423)	1.410 (0.0555)	1.620 (0.0638)
1.100 (0.0433)	1.420 (0.0559)	1.630 (0.0641)
1.125 (0.0443)	1.430 (0.0563)	1.640 (0.0646)
1.150 (0.0453)	1.440 (0.0567)	1.650 (0.0650)
1.175 (0.0463)	1.450 (0.0571)	1.660 (0.0654)
1.200 (0.0472)	1.460 (0.0575)	1.670 (0.0657)
1.225 (0.0482)	1.470 (0.0579)	1.680 (0.0661)
1.250 (0.0492)	1.480 (0.0583)	1.690 (0.0665)
1.280 (0.0504)	1.490 (0.0587)	1.700 (0.0669)
1.290 (0.0508)	1.500 (0.0591)	1.750 (0.0689)
1.300 (0.0512)	1.510 (0.0594)	1.800 (0.0709)

HINT:

- **Varying the adjusting shim thickness by 0.01 mm (0.0004 in.) changes the injection pressure by about 147 kPa (1.5 kg/cm^2, 21 psi).**
- **Only one adjusting shim should be used.**

(c) There should be no dripping after injection.
(See step (h) in step 2 above)