FU054–01

REASSEMBLY

1. ASSEMBLE INJECTION NOZZLE HOLDERS

(a) Assemble the nozzle holder body, adjusting shim, capsule sub–assembly, adjusting shim, No.1 pressure spring, No.1 pressure pin, distance piece, 2 straight pins and nozzle sub–assembly, and finger tighten the retainer nut.

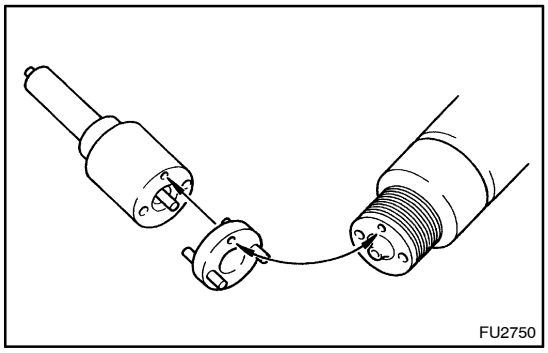
FU2750

HINT:

- Align the holes of the nozzle body, distance piece and nozzle holder body.
- When the thickness of the originally used adjusting shim is not known, use a shim 1.5 mm (0.56 in.) thick instead.

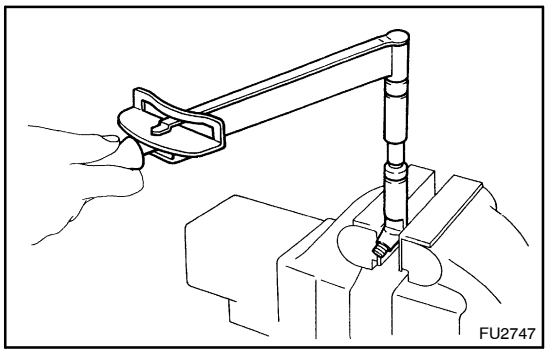
FU2747

(b) Using a 14 mm deep socket wrench, torque the retaining nut.

Torque: 34.3 N·m (350 kgf·cm, 25 ft·lbf)

NOTICE:

Over torquing could cause the nozzle deformation and the needle adhesion or other defects.